INDIVIDUAL VALIDATION			
	ARIZONA DEPARTMENT OF CORRECTIONS	**CHAPTER: 400** **PHYSICAL PLANT/FACILITIES**	OPR: Division Director, Administrative Services
401-T-PPS TECHNICAL MANUAL PHYSICAL PLANT STANDARDS		**DEPARTMENT ORDER: 401** **PRISON CONSTRUCTION**	SUPERSEDES: N/A EFFECTIVE DATE: **10/1/00** **Rev. 07/01/02** **Rev. 08/02/06** **Rev. 11/01/09** **Rev. 04/09/10** **Rev. 05/17/10** **Rev. 01/27/12** **Rev. 02/23/12**

FEBRUARY 23, 2012 REVISION SUMMARY

The Arizona Department of Corrections *401-T-PPS Technical Manual Physical Plant Standards* was revised on February 23, 2012. Changes are identified in red below:

3.2.1 Medium Custody Housing Requirements

Medium Custody inmates may be housed in dormitory or cell style buildings. Optimal number of beds per pod/housing unit will be based on sound correctional practice, which ensures the safety of staff and inmates as well as effective security. The housing unit shall have a control room per section 1.6.19.1.3, centrally located, capable of directly observing no more than 6 pods within a maximum of a 180 degree field of view. Pod size shall be limited to a maximum of 50 inmates per pod in dormitory style buildings. No more than 200 inmates shall be monitored by each control room officer for dormitory style buildings. Buildings shall be constructed to meet an I-3 condition 2 occupancy requirement. Exit and entry doors into the Pod areas shall be lockable. Movement between pods shall be restricted by an electronically and manually operated door or gate. Building may be constructed of masonry, concrete (pre-cast or cast-in-place), pre-engineered metal building or other materials that meet the above and code requirements.

JANUARY 27, 2012 REVISION SUMMARY

The Arizona Department of Corrections *401-T-PPS Technical Manual Physical Plant Standards* was revised on January 27, 2012. Changes are identified in red below:

Fencing: In all references to razor wire the standard shall be 5 point detainer hook and barb razor wire.

Fencing: In all references to fencing, fence ties shall be mechanically twisted and all straps and bolts shall be tack welded

1.4.1.5 Facility Appearance: Paint Colors
Specific color specifications shall match colors as manufactured by TriCom Coatings, Inc. and as listed:
Interior Trim – Blue Chip 302L20F
Buildings (Exterior Walls) – Drumhill Grey Latex 302A78F/ (metals) Drumhill Grey DTM 600A69F
Buildings (Exterior Walls) – Battleship Grey Latex 302A15F /(metals) Battleship Grey DTM 600A68F
Building Interior Walls – Chalky White 302W127
Cell Walls – Navajo White 302W05F or Florence Navajo White 302W210F

1.6.13.1 Area Requirements: Dental
3 Chairs per 1000 inmates

1.6.17.1 Area Requirements: Pharmacy
Deleted State Law and inserted per AZ Board of Pharmacy requirements

1.6.19.1.3 Security and Control Areas
Control rooms are required in Level 3, 4 and Level 5 facilities and may be required in Level 2 facilities depending on operational and security factors. Level 2 and 3 control rooms may be accessed from inmate occupied areas and require only a single security door. Level 2 and 3 control rooms shall have a means of egress for staff to evacuate the control room either through a roof hatch or to a safe area at ground level via an exit door. Level 4 and 5 control rooms shall be equipped with an escape ladder to the roof of the building, and be equipped with a means of securing the hatch from the roof side of the hatch

2.1.5.3 Minimum Custody Perimeter and Area Lighting
Two foot candles of lighting on perimeter

2.2.1 Housing: Minimum Custody Officer Station
The housing unit shall have an officer station for direct supervision; it shall be elevated 2' and located against the wall at the front of each pod. It shall have 2 access points with dutch type doors installed at each.

2.2.1.1.1 Minimum Custody Pod Area
Movement between pods shall be restricted by an electronically and manually operated door or gate.

3.1.4 Medium Custody Facility Size Requirements
Must be designed to separate recreation yards

3.2.1 Medium Custody Housing Requirements
The housing unit shall have a control room per section 1.6.19.1.3. Movement between pods shall be restricted by an electronically and manually operated door or gate.

INDIVIDUAL VALIDATION			
	ARIZONA DEPARTMENT OF CORRECTIONS	**CHAPTER**: **400** **PHYSICAL PLANT/FACILITIES**	OPR: Division Director, Administrative Services
401-T-PPS **TECHNICAL MANUAL** **PHYSICAL PLANT STANDARDS**		**DEPARTMENT ORDER: 401** **PRISON CONSTRUCTION**	SUPERSEDES: N/A EFFECTIVE DATE: **10/1/00** **Rev. 07/01/02** **Rev. 08/02/06** **Rev. 11/01/09** **Rev. 04/09/10** **Rev. 05/17/10** **Rev. 01/27/12**

TABLE OF CONTENTS

Statement of Philosophy

Executive Summary

Part 1 General Parameters

Part 2 Security Level Minimum Facility Requirements

Part 3 Security Level Medium Facility Requirements

Part 4 Security Level Close Facility Requirements

Part 5 Security Level Maximum Facility Requirements

Part 6 Complex

Part 7Appendixes:

Appendix I - Regulatory Codes
Appendix III - Fences
Appendix IV - Furniture
Appendix V - PAR Course Requirements
Appendix VI - Finish Schedules

STATEMENT OF PHILOSOPHY

The design, construction and remodeling for prisons must promote a safe environment as well as an efficient, effective and operational facility. Health and safety measures must enable the elimination, control or minimization of the risk of injury to both staff and inmates. Facility organization must advance the security perspectives of controlled inmate activity management and restricted movement. Managing safety at the workplace requires those involved to continually seek to attain innovative ways to improve employee safety as new prisons or modifications are contemplated. ADC developed this Standards Manual to ensure these outcomes are realized.

EXECUTIVE SUMMARY

This manual is to be considered a work in progress that will be updated as revisions in statute, relevant case law, improved technology and sound correctional practices dictate. Physical plant design, construction, FF&E (Fixed Furnishings/Fixtures and Equipment) and hardware requirements beyond those generally described in this manual will be detailed in procurement documents developed by subject matter experts or described in detail in response to Requests for Proposals (RFP) from prospective offerors for consideration by the Department.

This document contains general information about the operational levels within the prison system and the specific requirements for various prison risk levels. A review of case law and statutes has been performed, listing current relevant citations, clarifying and supporting the specific Standard(s).

The ***Physical Plant Standards Technical Manual*** was promulgated to enable all parties engaged in a prison construction effort understands in general terms what ADC requires to enhance and protect the Agency Public Safety Mission, while meeting the needs of the staff and inmates for a safe, secure and operationally efficient work/living environment. It is expected that those who may compete for available contracts with the Department, will meet or exceed these standards. This manual will be used as a basis for the review of proposed facilities. All other new construction will be required to adhere to the standards described in this manual. Additionally, in support of the Arizona Correctional Industries (ACI), items produced and typically used in prison environments that are produced by inmates working for ACI, have been specified for installation or use.

This manual has been developed in seven parts, which will allow the State to define the requirements of any specific prison facility by combining requirements of specific parts of this manual. As an example, Part 1 combined with Part 2 – (Minimum Facility Requirements) and Part 7 – (Appendix) fully defines the design requirements of a Minimum facility.

Part 1 - General Parameters

1.1 Definition of Terms.....2
1.2 Building and Safety Code
1.2.1 Code Compliance.....4
1.3 Site Location Parameters
1.3.1 Emergency Medical Response Requirements.....4
1.3.2 Population Center Requirements.....4
1.3.3 Zoning and Use Permits.....4
1.3.4 Fire Protection Services.....5
1.4 Facility Parameters
1.4.1 General Requirements.....5
1.4.2 Fencing Design.....6
1.4.3 Parking.....6
1.5 Environmental Parameters
1.5.1 HVAC.....6
1.5.2 Plumbing Requirements.....12
1.5.3 Fire Protection.....15
1.5.4 Lighting.....16
1.5.5 Electric Power and Telecommunications.....18
1.5.6 Emergency Generator.....19
1.5.7 Fire Alarm System.....20
1.5.8 Acoustics.....20
1.5.9 Water Quality & System Design.....20
1.5.10 Waste Water System.....21
1.5.11 Natural Lighting.....21
1.5.12 Female Facilities Specifications.....22
1.5.13 Temporary Holding Enclosures.....22
1.6 Common Support Requirements
1.6.1 Finish Schedules.....23
1.6.2 Facility Administration / Operations.....23
1.6.3 Visitation.....25
1.6.4 In-Take and Processing.....26
1.6.5 Hearing.....27
1.6.6 Resource Center.....28
1.6.7 Classroom.....28
1.6.8 Property and Mail.....29
1.6.9 Counseling.....29
1.6.10 Recreation.....30
1.6.11 Medical / Dispensary.....31
1.6.12 Laundry.....32
1.6.13 Dental Services.....33
1.6.14 Warehouse.....34
1.6.15 Maintenance.....34
1.6.16 Vehicle Maintenance.....35
1.6.17 Pharmacy.....36
1.6.18 Hair Care.....36
1.6.19 Detention.....37
1.6.20 Kitchen.....38
1.6.21 Nurse Line Area.....39
1.6.22 Medical Dispensary/Mental Health/Nurse Line.....40

PART 1 - GENERAL PARAMETERS

APPLICATION: This technical manual is designed to provide direction in matters related to the design and construction of prison facilities. Deviations from authorized standards and requirements will be considered if they are in the Department's opinion consistent with sound correctional practices. Request for approved changes to the standards shall be made in writing to the Administrator of the Engineering and Facilities Bureau for consideration with final approval of any changes forwarded to the Department Director, citing the Physical Plant Standards number, the specific proposed change and the reason for the change. The Director will review the request and if approved, provide written approval of any acceptable changes to these standards. The standards and requirements contained herein are intended to apply to new construction of ADC facilities and contracted private facilities that have entered into a contract with ADC to house inmates, with limited application to renovations of ADC prisons. Those Standards also applicable to renovations are: 1.2.1; 1.4.1.5; 1.4.2; 1.4.1.3, 1.5.3.1 through 1.5.3.4 inclusive and 1.5.7.1.

1.1 DEFINITION OF TERMS

1.1.1 ABBREVIATIONS, WORDS, TERMS AND PHRASES DEFINED: For the purpose of this standards technical manual the following list of words, terms and phrases are defined for the sole purpose of construction and renovation and are not official definitions as used in other written instruction. The words are to provide clarity to the technical information provided. Terms related to correctional facilities are used differently throughout the United States, and can cause confusion related to facility design and operational requirements.

1.1.2 ACCEPTED EXPRESSIONS:

ACA: American Correctional Association

ACI: Arizona Correctional Industries

ADC: Arizona Department of Corrections

AIMS: Adult Information Management System.

CCTV: Closed Circuit Television system used for surveillance purposes.

NCCHC: National Commissions on Correctional Health Care.

COMPLEX CONTROL: The Control Room from which security and control for a prison Complex occurs. It includes monitoring of systems within each prison unit and is responsible for overall site security and control issues.

COMPLEX: A prison consisting of a grouping of prison units with individual and/or shared perimeter fences and share centralized administrative and support functions located outside the units themselves.

DETENTION: High security housing unit used to isolate inmates from the general population on a short-term basis.

DORMITORY: A large single-space for the housing of inmates. The room provides spaces for multiple inmate living. Size of the space varies based on the requirements within this manual. Suitable for minimum and medium custody levels.

FACILITY: A stand-alone prison, which contains all of the functions, defined in a prison unit and some of the functions found at a complex level. It is a facility that is capable of operating in a self-sufficient manner. Support buildings and functions that are not available on site are normally contracted out.

FACILITY CONTROL: The control room responsible for security and control of the standalone facility, including perimeter security and all site-wide security and control issues. This control room provides monitoring of other control rooms within the facility (e.g., housing control, yard control, sally port positions, etc.).

HOUSING UNIT: A building or portion thereof that provides a complete security barrier around all spaces that is consistent with the custody level contained. Housing unit styles may be either dormitory and/or celled. Officer Stations for Minimum level custody facilities and Control rooms for Medium, Close and Maximum level custody facilities staff to observe all beds in the dormitories or doors of the cells they control, and are an integral and required element of a housing unit.

MAJOR ADDITION: "A Major Addition" is defined as the addition of permanent housing and the Complex and/or Facility Support Building necessary to support the additional inmate population to be housed. In this case, all of the requirements contained in these Standards apply. This requires the additional square footages of all Complex and Support Buildings.

MANAGEMENT UNIT: A portion of the facilities' population made up of a manageable number of inmates, which are divided by fencing.

MATV: Master Antenna Television system.

POD: A pod is a grouping of cells and an adjacent common space or dayroom. The entry/exit doors are locked, providing a secure barrier suitable for the custody level. Each pod contains showers and janitor closet to support the living activities. Several pods may be grouped around an officer station or control room to form a housing unit.

RENOVATION: A major modification to an existing prison structure or a significant change to the use or occupancy of a prison structure. [Standards designated (Renovation) apply to renovation efforts as well as to new construction].

SECURE VESTIBULE: A space developed to provide controlled movement of inmates, the public or staff between various functions. The space shall consist of at least two interlocked remotely controlled doors, and be designed to provide a continuation of the buildings' security barriers.

UNIT: A group of prison buildings and recreation fields that are within a fenced area and are designed to meet the facility size requirements per the custody level being housed in this unit. The buildings contain the housing, support, education, work based education, visitation, kitchen, dining and administration spaces necessary to support the activities of the staff, inmates and public. Two custody levels may be contained in a single unit, provided the design and construction will yield adequate separation.

UNIT CONTROL: The control room responsible for the security and control of a prison unit, including its perimeter security system and all internal security and control functions. This control room provides monitoring of other control rooms within the facility (e.g., housing control, yard control, sally port positions, etc.). The unit control is generally not responsible for perimeter patrol activities. Complex Control coordinates patrol activities.

WING: A wing is a portion of a housing unit with cells or small pods aligned along a corridor.

1.2 BUILDING AND SAFETY CODES

1.2.1 CODE COMPLIANCE:

All work shall comply with applicable federal, state, and/or local building, fire safety codes and the standards herein.

Code compliance shall be demonstrated through licensure and where a license is not issued, through inspection certificates.

The codes in Appendix 1 shall be adhered to as well as any revisions promulgated subsequently.

1.3. SITE LOCATION PARAMETERS

1.3.1 EMERGENCY MEDICAL RESPONSE REQUIREMENTS: A Facility or Complex shall be sited in proximity to a city or town such that emergency services are within a 30-minute travel time from the prison. Renovated existing facilities shall also be located within the time constraints listed above.

1.3.2 POPULATION CENTER REQUIREMENTS: Proximity to a civilian population center is to augment the services provided directly by the institution, to provide greater recruitment and training opportunities for staff, to accommodate visitors, and to provide employment opportunities for inmates.

1.3.3 ZONING AND USE PERMITS: Facilities to be utilized by ADC shall be renovated or constructed on property with proper zoning which will allow the operation of a correctional facility of the level of the security level required by ADC. Special Use Permits shall be in place if they are a requirement of the zoning restrictions.

1.3.4 FIRE PROTECTION SERVICES: A prison complex or facility shall be sited in proximity to a city or town such that emergency services are within a 30 minute travel time from the prison. The use of a volunteer or internal fire department is acceptable for compliance, assuming that the fire station is readily accessible in case of fire and that it is the primary alternative source available. If the fire station is not continually staffed, fire alarm notification (telephonic or direct link) must be made to a local law enforcement unit or equally reliable source.

1.4 FACILITY PARAMETERS

1.4.1 GENERAL REQUIREMENTS: ADC has developed general terms defining the levels of security risk within the Arizona Department of Corrections. The following general parameters and specific requirements in Part 2 through 7 of this manual shall be complied with based on the level of security of the facility. Appendix 2 provides a definition of each Risk Level.

1.4.1.1 Facility or Unit Capacity: The capacity of a facility or a unit within a prison complex may be designed to house a maximum of 1,000 inmates.

In determining size, the Department shall consider the custody level and the ability of staff to observe unit dynamics and security requirements. Inmate housing areas are the foundation of institutional living and must promote the safety and well being of both staff and inmates.

1.4.1.2 Facility Gross Square Footage: The minimum gross square footage of the entire complex or facility based on required building square footages shall be a minimum of 175 s.f./inmate. In some circumstances (such as the addition of a unit to an existing complex) some of the structures and/or services may be out-sourced or served by the main complex. In those cases, documentation must be provided on the out-sourced services and justification provided for reduction of square footages. Reductions in square footages are to be itemized and shall be reviewed by an ADC review panel for approval by the director. The following square footages that are not to be included in the total for the purpose of this paragraph, (water treatment plant buildings, wastewater treatment plant buildings and/or other buildings) that are not specifically required by these Standards.

1.4.1.5 Facility Appearance: Facilities or complex buildings shall be painted grey. (It is acceptable to leave CMU or concrete on the interior of a building without paint if waterproofing is not required.) All interior building trim and miscellaneous metals shall be painted blue. Exterior metals shall be painted with DTM type paint to match exterior wall color. Cell walls shall be painted Navajo White. Employee office areas shall be painted white. Pre-engineered metal buildings shall not be painted, but color selection shall match as closely as possible to Department color selections.

Specific color specifications shall match colors as manufactured by TriCom Coatings, Inc. and as listed:

- Interior Trim – Blue Chip 302L20F
- Buildings (Exterior Walls) – Drumhill Grey Latex 302A78F / (metals) Drumhill Grey DTM 600A69F

- Buildings (Exterior Walls) – Battleship Grey Latex 302A15F / (metals) Battleship Grey DTM 600A68F
- Building Interior Walls – Chalky White 302W127
- Cell Walls – Navajo White 302W05F or Florence Navajo White 302W210F

1.4.2 FENCING DESIGN: Fencing structure and footings are to be designed to meet the soil conditions at the site based on the geotechnical recommendations and to meet the wind loading and seismic conditions of the area per code recommendations. Minimum requirements for wind loading shall be 90 mph and seismic zone 2. Provide sealed structural calculations for ADC approval.

1.4.3 PARKING: Provide 287 parking spaces adjacent to the main entry point to the Unit. If utilizing a Complex Parking Lot then provide 287 parking spaces per Unit based on the following requirements:

Staff/Visitor Parking: Provide 280 vehicle parking spaces per individual prison unit.

Accessible Parking: Provide 7 Handicapped Accessible parking spaces per individual prison unit.

1.5 ENVIRONMENTAL PARAMETERS

1.5.1 HVAC

1.5.1.1 GENERAL:

1.5.1.1.1 Mechanical design shall consider the degree of difficulty and cost for maintaining and operating a prison, as related to placement and potential abuse of equipment.

1.5.1.1.2 For buildings located within the security area, security, staff safety and inmate safety take precedence over energy conservation issues.

1.5.1.1.3 Buildings must meet the energy conservation requirements of ASHRAE Standard 90.1. In addition, they must comply with the following current Arizona Statutes and Executive orders:

ASRS §34-451	Energy conservation standards for public buildings
ASRS §34-452	Solar design standards for state buildings; energy life cycle costing
Executive Order 2005-5	Implementing Renewable Energy and Energy Efficiency in New State Buildings
Executive Order 2004-28	Statewide 5% Water Use Reduction
Executive Order 2003-14	Implementing Statewide Efficiency Review

1.5.1.1.4 New construction in either modernization or renovation projects shall conform to the level of minimum standards as described for new prisons.

1.5.1.1.5 Alterations to existing, or installation of new mechanical systems in existing structures shall be accomplished in conformance with the requirements for new prisons.

1.5.1.1.6 Redundant A/C systems shall be designed for telephone and computer server rooms to insure continued operation should one system fail.

1.5.1.2 SECURITY

1.5.1.2.1 Wall Openings and Duct Penetrations:

1.5.1.2.1.1 Security shall be maintained for openings exceeding 5 inches in any dimension or duct penetrations in perimeter walls, floors, or ceiling/roof of secure rooms or areas, by fitting to the opening (on the side away from the opening if possible) an assembly of round steel bars welded to a perimeter welded steel frame or an acceptable manufacturer's product

1.5.1.2.1.2 The areas and buildings requiring these security bars are those in Close, Maximum, and all detention housing units (including control rooms), inmate canteen, receiving and release, armory, locksmith, visiting, central control, complex control and pharmacy.

1.5.1.2.2 Security Bar Assembly:

1.5.1.2.2.1 Duct mounted security barrier shall be constructed of vertical 3/4" diameter, tool-resistant steel bars on maximum 6" centers with horizontal 2" x 1/4" flat steel bars on maximum 8" centers. Horizontal and vertical bars shall be welded at each cross-point. Barrier bars shall be welded into 1/4" x 2" steel frame.

1.5.1.2.2.2 Security barriers in shower exhaust ducts and dishwasher exhaust ducts shall be stainless steel.

1.5.1.2.3 Security Air Inlets and Outlets: Security type air inlets and outlets shall be provided for all openings in perimeter walls, floors or ceilings/roofs of secure room or areas.

1.5.1.2.4 Grilles: Supply and return grilles in Close, Maximum and all detention building cells, shall be constructed of 3/16" steel to comply with ASTM A36.

1.5.1.2.4.1 The face of the grille shall be perforated with 5/16" diameter holes arranged on 7/16" staggered centers.

1.5.1.2.4.2 The grille shall have a 1 inch steel border around the entire perimeter.

1.5.1.2.5 The areas and buildings requiring these security bars are those in Close, maximum and all detention housing units (including control rooms), inmate canteen, receiving, and release, armory, locksmith, visiting, central control, complex control and pharmacy.

1.5.1.2.6 Any equipment that is accessible to inmates from the yard shall have a 10 foot high chain link fencing enclosure constructed around it of with 1—36" wide gate and 1 coil of 30" 5 point detainer hook and barb concertina razor ribbon around the top of the enclosure.

1.5.1.3 HVAC DESIGN CONDITIONS

1.5.1.3.1 Outdoor Conditions:

1.5.1.3.1.1 The outdoor design conditions shall be determined from the Climatic Data for Region X Arizona, California and Nevada issued by ASHRAE.

1.5.1.3.1.2 The summer design dry bulb and design wet bulb shall be taken from the 0.5 percent columns. The winter dry bulb shall be taken from the 0.2 percent column.

1.5.1.3.2 Indoor Environmental Requirements:

1.5.1.3.2.1 Mechanical cooling shall be provided to maintain a maximum indoor temperature of 78°F within the ASHRAE summer comfort zone. Unless contradicted by security considerations or site and design conditions, equipment shall be ground-set. Ground-set equipment shall be located in areas not accessible to inmates or secured by fencing. Equipment selected shall be of the highest EER/SEER rating available.

1.5.1.3.2.2 Evaporative cooling may be provided for warehouse or industrial buildings. 12" Glasdek media shall be used as a minimum media thickness and be comprised of 4" thick and 8" thick media to allow replacement of the 4" media during regular maintenance.

Inmate spaces in the Minimum and Medium Custody facilities shall be designed for air conditioning to maintain a maximum indoor temperature of 80°F within the ASHRAE summer comfort zone.

1.5.1.3.2.3 Heating shall be provided for inmate, mixed use, and staff only spaces to maintain a minimum indoor temperature of 68°F within the ASHRAE winter comfort zone.

1.5.1.3.2.4 The following areas have special requirements:

1.5.1.3.2.4.1 Within Close and Maximum level custody facilities the housing unit control room, central control and complex control

shall have an independent separate air conditioning system, which is separated from the remaining structure, in order to prevent intrusion of chemical agents or smoke. Space shall be positively pressurized and air conditioned space is to be completely sealed to prevent passage of chemical agents or smoke.

1.5.1.3.2.4.2 The dry food storage area shall be air conditioned and shall be maintained between 68°F and 78°F.

1.5.1.3.2.5 Except for areas indicated specifically elsewhere, warehouses and storage facilities shall be maintained at a maximum of 80°F. If evaporative cooling is used, the summer temperatures shall be maintained with evaporative cooling with 12" deep minimum Glasdek.

1.5.1.3.2.6 Work Based Education (WBE) areas shall be treated as typical inmate occupied areas, unless the equipment or type of operation used to teach the inmates in the specific areas places either a greater or lesser demand for temperature requirements.

1.5.1.3.3 Energy Sources:

1.5.1.3.3.1 Heating: Where natural gas is available, it shall be distributed throughout the site as the source of heating.

1.5.1.3.3.2 Hot Water: The use of solar technology for water heating is strongly recommended.

1.5.1.4 VENTILATION

1.5.1.4.1 General: Close and Maximum housing units shall receive a minimum of 40 cfm outside air per cell.

1.5.1.4.2 Exhaust Ventilation Requirements:

1.5.1.4.2.1 Restrooms and public toilets require exhaust at 2 cfm per square foot.

1.5.4.1.2.2 Janitor’s closets require exhaust at 2 cfm per square foot.

1.5.1.4.2.3 Kitchen exhaust shall comply with NFPA 96.

1.5.1.4.2.4 Showers shall be exhausted to provide for 100 cfm per shower head.

1.5.1.4.2.5 There shall be a minimum exhaust of 100 cfm from each cell.

1.5.1.4.2.6 There shall be exhaust from the bench in the armory to exhaust fumes. A slotted hood is preferred.

1.5.1.4.3 Smoke Exhaust:

1.5.1.4.3.1 Smoke exhaust for all "I" occupancy buildings shall be in accordance with NFPA, UBC, and UFC, with modifications as accepted by State Fire Marshal.

1.5.1.4.3.2 In cell areas, upon detection in a zone, the smoke exhaust shall be energized. Air handlers in adjacent zones shall operate normally. Air handlers in smoke zone shall go to 100% outside air. If smoke is detected in supply duct, AHU shall shut down.

1.5.1.4.3.3 The operation of the smoke exhaust mode for the air conditioning systems shall be controlled by:

1.5.1.4.3.3.1 Smoke detection systems in the exhaust/return air ducts.

1.5.1.4.3.3.2 Area smoke detectors.

1.5.1.4.3.4 Consideration should be given into the use of two speed exhaust fans in accomplishing the smoke evacuation.

1.5.1.5 DUCT SYSTEMS

1.5.1.5.1 Ductwork:

1.5.1.5.1.1 The ducts shall be designed as low pressure galvanized ductwork in accordance with SMACNA Low Pressure Duct Construction Standards and ASHRAE handbooks, except as noted in the following:

1.5.1.5.1.1.1 Spiral wound round ducts may be used.

1.5.1.5.1.1.2 Exhaust ducts from showers, kitchen dishwasher hood, and other wet areas shall be aluminum or stainless steel.

1.5.1.5.2 Ducts Exposed to Inmate Reach:

1.5.1.5.2.1 Ducts are considered exposed to inmate access if they are located within twelve feet of the floor, mezzanine or ground in an inmate accessible area.

1.5.1.5.2.2 When ducts are exposed in inmate accessible areas, the duct shall be welded rectangular ducts. The sheet metal shall be at least 14 gauge in thickness. The sections shall be welded or screwed together with tamper-proof fasteners. Slip joints are not allowed.

1.5.1.5.2.3 If, due to unevenness of duct or ceiling, there is a crack exceeding 1/32 inch between duct and ceiling, within reach in inmate accessible areas, then such crack must be covered by a 1 x 1 x 1/4 inch angle iron which is spot welded to the duct and bolted to the ceiling with tamper-proof fasteners.

1.5.1.5.3 Ductwork Accessories:

1.5.1.5.3.1 All ductwork accessories shall be standard accessories conforming to SMACNA, NFPA and UL requirements for grilles, registers, balancing dampers, fire dampers and combined smoke and fire dampers, except as noted below:

1.5.1.5.3.1.1 Grilles and registers shall provide for a proper air distribution, and shall be designed to avoid blowing air directly at inmates or staff.

1.5.1.5.3.1.2 Grilles and registers at showers and wet locations shall be of aluminum or stainless steel for minimum and medium security and stainless steel for close and maximum security and all detention units.

1.5.1.6 CONTROLS

1.5.1.6.1 Air Conditioning Control: Control systems may be independent and stand-alone for each building. A/C design may provide for central controls. Energy efficient central plant chillers are strongly recommended and should always be evaluated against independent systems to achieve the greatest energy efficiency.

1.5.1.6.2 Smoke Control: Smoke management is required in the housing buildings.

1.5.1.6.3 Thermostats:

1.5.1.6.3.1 Thermostats controlling inmate accessible areas shall be of the remote sensor type, where the sensor is located in the return air ductwork, and the controller located in the equipment or mechanical rooms whenever possible.

1.5.1.6.3.2 If it is not possible to use or mount thermostats outside the inmate accessible areas, the thermostat shall be provided with a minimum 14 gauge tamper-proof enclosure.

All controls shall be installed in such a manner as to be accessible only to authorized staff. If this is not possible, security grade, lockable covers may be used.

1.5.2 PLUMBING REQUIREMENTS

1.5.2.1 General

1.5.2.1.1 Accessibility:

1.5.2.1.1.1 The prison shall be designed to provide for access spaces or chases adjacent to inmate cell toilet-lavatory combos, inmate toilets, urinals and showers. They shall contain the sanitary and domestic water piping in addition to other required utilities.

1.5.2.1.1.2 These spaces or chases shall not be accessible to inmates.

1.5.2.1.1.3 Fixture isolation valves, water closet and urinal flush valves, lavatory P-trap and lavatory valves shall be designed to be serviced only from inside these access spaces or chases where the necessary work space shall be provided.

1.5.2.1.1.4 Design documents shall contain a large scale detailed layout of plumbing for the plumbing chase between the cells.

1.5.2.1.1.5 A “mock-up” of the design for all ductwork, plumbing and electrical and control wire in the chase between cells shall be built and approved by ADC prior to installation.

1.5.2.1.1.6 Water conservation fixtures, controls, and valves are required. Urinal fixtures should not exceed 1 gallon per flush and waterless urinals are to be installed in staff areas. Toilets should not exceed 1.5 gallons per flush. Showerheads should not exceed 2.5 gpm and lavatory faucets should not exceed 2 gpm and must be equipped with aerators. In kitchen areas, low-flow pre-rinse valves shall not exceed 1.6 gpm, door-type dishwashing machines shall be utilized consuming 1.5 gallons per rinse cycle shall be utilized.

1.5.2.1.2 Domestic Hot Water:

1.5.2.1.2.1 In accordance with section 1.5.1.1.3 and 1.5.1.3.3.2, the use of thermal solar technology is strongly encouraged.

1.5.2.1.2.2 Where natural gas is available, the domestic hot water shall be heated in local gas fired water heaters or high efficiency boilers in each building. Tankless, on demand type water heaters may be utilized in some locations if approved by the Engineering and Facilities Bureau. In kitchens and other high use areas a redundant system is desirable in case of equipment failure.

1.5.2.1.2.3 Electrical water heaters may only be used in structures with a low occupancy and low water usage, if this is more economical than providing long supply lines for natural gas or hot water. The use off "instant", "tankless" or "point of use" electric hot water heaters is preferred.

1.5.2.1.2.4 Hot water shall be provided at 105 degrees (adjustable from 100 degrees to 120 degrees) for sinks, lavatories and showers.

1.5.2.1.2.5 Hot water at 140 degrees shall be provided for the kitchen.

1.5.2.1.2.6 Hot water at 180 degrees shall be provided if required by dishwashing equipment by local booster heaters for usage in the kitchen automated dishwashing equipment.

1.5.2.1.2.7 The hot water main lines shall have a re-circulating loop system.

1.5.2.1.3 Contamination Prevention: The domestic water system shall be protected from potential contamination.

1.5.2.1.4 Water Conserving Fixtures: All fixtures shall be selected to minimize their water usage and comply with State statutory requirements.

1.5.2.1.5 Laundries: Laundries shall utilize wastewater heat recovery systems and simple rinse water reuse systems.

1.5.2.1.6 Evaporative Coolers: are to be equipped with timers for bleed water discharge. Discharge water from evaporative coolers shall not be discharged to the sanitary system if on-site waste water treatment facilities are provided.

1.5.2.2 PIPING

1.5.2.2.1 Interior Waste and Vent Lines: Pipes shall be concealed where possible. Where piping is exposed in areas accessible to inmates, "Hub-type" joints shall be used.

1.5.2.2.2 Drains and Cleanouts: Drains and cleanout covers shall be secured using tamper-proof fasteners in all areas. Drains shall be provided at all toilet rooms.

1.5.2.2.3 Baffles in Drain Lines: Sanitary waste piping connections for water closets in inmate rooms, where installed "back-to-back" with common chase, shall be piped utilizing a sanitary tee fitting with integral baffle so that there cannot be any direct pass-through in the piping.

1.5.2.2.4 Domestic Water Piping:

1.5.2.2.4.1 Piping shall be concealed where possible. Exposed piping shall be identified at approximately 20 foot intervals.

1.5.2.2.4.2 Sectional valves to isolate sections of piping for maintenance and repairs shall be provided.

1.5.2.2.5 Freeze Protection:

1.5.2.2.5.1 All exterior exposed plumbing shall be protected from freezing.

1.5.2.2.5.2 Assume ASHRAE 0.2% standard temperature for design.

1.5.2.2.5.3 Use insulation in lieu of heat trace where insulation alone will provide the required protection at the ASHRAE design temperature.

1.5.2.2.5.4 Where no ASHRAE temperature is listed for the site, confer with ADC for selection of appropriate design temperature.

1.5.2.3 INTERCEPTORS

1.5.2.3.1 Grease Interceptors:

1.5.2.3.1.1 Sizing of grease interceptors shall be in accordance with the requirements of the formula for full service kitchen of the UPC.

1.5.2.3.1.2 The sizing shall be based on emptying the grease interceptor twice monthly.

1.5.2.3.1.3 The grease interceptor may be sectionalized, but installed on a solid unitary base.

1.5.2.3.1.4 Only grease bearing effluents shall be discharged into the grease interceptor.

1.5.2.3.2 Oil Interceptors:

1.5.2.3.2.1 Floor drains in any area, such as garages, automobile repair and maintenance shops or fuel storage and handling areas, where the runoff may contain oil or spilled fuel, shall be provided with an oil interceptor to prevent oil or fuel from entering the sanitary sewer or storm drainage system.

1.5.2.3.2.2 Only oil bearing, grease bearing, or flammable effluents shall be discharged into the oil interceptor.

1.5.2.3.3 Soil Interceptors:

1.5.2.3.3.1 Soil interceptors shall be provided in the drain lines, where there is a risk of contaminating the drain water with soil, sand or gravel, such as runoff from areas where trucks are washed, or runoff from areas where potting of plants, gardening or landscaping is performed.

1.5.2.3.3.2 Only solid, sand or gravel bearing effluents shall be discharged into the soil interceptor.

1.5.2.3.3.3 Oil and soil interceptors may be combined into one, where there is a mixing of the oil and soil contaminations, such as runoff from truck washing areas.

1.5.3 FIRE PROTECTION

1.5.3.1 Codes and Requirements

1.5.3.1.1 Extinguishment requirements and sprinkler systems shall comply with NFPA 13 and UFC.

1.5.3.2 Sprinkler heads

1.5.3.2.1 Sprinkler heads used in inmate acceptable areas within the inner security perimeter shall be institutional type and tamper-resistant. If the sprinkler head is equipped with an escutcheon, it shall require a special tool for removal.

1.5.3.2.2 When sprinkler heads are required in inmate accessible areas with limited head height, they shall be security type with flush mounting.

1.5.3.2.3 In dayrooms of housing units, piping and sprinkler heads shall be designed to be out of reach of inmates. Where piping must be exposed in activity areas, pendant type sprinkler heads will be used and the pipe will be strapped to the ceiling or roof slab overhead at intervals sufficiently close to maintain straight alignment.

1.5.3.2.4 At least 4 spare sprinkler heads of each type used shall be provided at the site, together with any special tools required for head replacement for each building.

1.5.3.2.5 Before final design or installation, a sample of all proposed security area sprinkler heads shall be presented to ADC for inspection/approval.

1.5.3.2.6 Sprinkler heads installed in radio, security and electrical rooms within another structure shall not be located above equipment, in order to prevent equipment damage due to water leakage.

1.5.3.3 Isolation Valve

1.5.3.3.1 An isolation valve shall be provided for each sprinkler system with a water flow detection alarm switch and a valve tamper switch connected into the central detection and alarm system. Valves and switches shall not be installed in areas accessible to inmates.

1.5.3.4 Fire Protection Water

1.5.3.4.1 If on-site water storage is required, the capacity shall be determined by local jurisdiction requirements, NFPA, UBC and UFC.

1.5.3.4.2 Fire protection water shall be provided from the site domestic water system, but with separate entries to the buildings that require fire water for sprinklers or standpipes.

1.5.4 LIGHTING

1.5.4.1 Exterior Lighting Fixtures

1.5.4.1.1 Exterior lighting shall conform to local lighting codes. These codes shall be verified with the local jurisdiction. Foot candle levels shall be provided as required in parts 2-6 under 1.5 Physical Security. Building and site lighting shall be controlled by a combination photocell on, and time clock off. Time clock shall be digital with battery backup.

1.5.4.1.2 High mast lighting shall be utilized where allowed by local codes. Poles shall be round steel with the lowering mechanism in the pole powered by a portable motor. High mast lighting shall be a top latch system with a maximum pole height of 100 feet. Bases shall be designed and certified by a Structural Engineer. Light source shall be high pressure sodium or an energy efficient type that has the ability to deliver the required light levels.

1.5.4.1.3 Pole mounted lights shall consist of a sealed optical system, sharp cut off utilizing 400W high pressure sodium light. The sealed optical system shall consist of neoprene seal on the lens and a permanent gasket at wire penetration from ballast to the optical chamber. Poles shall be round steel. Energy-efficient fixtures capable of providing the required foot candle levels are required whenever available.

1.5.4.1.4 Building mounted lights shall be the same style as pole lights except 150 or 250 watt high pressure sodium or metal halide lamps. Energy-efficient fixtures capable of providing the required foot candle levels are required whenever available.

1.5.4.1.5 All high pressure sodium lamps shall be stand-by (SBY) rated for instant re-strike.

1.5.4.2 General Light Levels

Lighting throughout the prison is determined by the tasks to be performed, interior surface finishes and colors, type and spacing of light sources, outside lighting, shadows and glares.

Lighting levels indicated herein refer to maintained foot-candle level of illumination calculated with the light loss factor, and maintenance factor of 0.70 % based on lumen output for lamps after initial burn in. Where specific foot-candle levels of illumination are not specified, the median recommendations of the Society of Illuminating Engineers shall be used.

Area	Foot Candle Limit/Specification
Office/Work Spaces	60
Restrooms	30
Corridors	20
Security Areas and housing	30 - 50
Dayrooms	30
Sally ports	20
Vestibules	10
Barber Shop / Storage Room	50
Food Server	50
Counselor	60
Mechanical/Electric Equip. Room	20
Showers/Lavatory/Toilet	20
Stairway	10
Officers Station	50
Walkways/Balconies	10
Classroom	65 - 75
Work Based Education Classroom	65 - 75
Shops	20 - 50
Warehouse	20

1.5.4.2.1 Shop areas where grid ceilings are utilized, 3 lamp fluorescent troffers with T-8 or better tubes and electronic ballasts at a minimum shall be utilized. Troffers shall have .125 inch acrylic lens. Two lamps troffers may be utilized in corridors. T-5 lighting is preferred.

1.5.4.2.2 Strip fixtures with exposed lamps shall not be used anywhere in the facility. Wire guards are not acceptable. All fixtures shall have an appropriate lens. Industrial style fluorescent fixtures may be used in warehouse areas providing they are mounted ten or more feet above finished floor.

1.5.4.2.3 In Minimum and Medium Custody dormitories, general area lighting shall be provided by vandal resistant T-8 or better fluorescents with a minimum 3/16" polycarbonate lens. Approximately every 16 feet install a PL-5 fluorescent night light fixture separately switched from the unit control station.

1.5.4.2.4 Close Custody cells shall be equipped with a porcelain keyless socket and appropriate lamp. LED or CFL lamps are preferred.

1.5.4.2.5 Maximum Custody cells shall be equipped with a 12 gauge steel up/down fixture with 1/2" house side polycarbonate lens and a 1/8" acrylic lens fixture side or an appropriate approved manufacturer's product. Provide appropriate biax lamp.

1.5.4.2.6 Exit signs shall utilize LED, CFL or Self-Luminous/Tritium technology

1.5.5 ELECTRIC POWER AND TELECOMMUNICATIONS

1.5.5.1 Provide a minimum of four duplex electrical outlets (one per wall) in all offices. It is preferred that they be on their own circuits. Provide one four-plex data/communications outlet for each occupant of the office space.

1.5.5.2 Cells shall be equipped with two duplex electrical outlets located near the bunk and two outlets for cable TV. Boxes for power and cable shall not be back to back with adjacent cells. Cover plates for electrical and cable TV outlets shall be equipped with security type screws.

1.5.5.3 Dormitories shall be equipped with one outlet and one cable TV outlet per bed. Cover plates for electrical and cable TV outlets shall be equipped with security type screws.

1.5.5.4 Provide two duplex electrical outlets and one four-plex data/communication outlets per 80 s.f. for all multiple occupancy office areas.

1.5.5.5 Provide one duplex electrical outlet per 120 s.f. for all general office storage or work rooms.

1.5.5.6 Provide a 20 amp. dedicated circuit, duplex receptacle in all corridors at a maximum of 50 foot intervals.

1.5.5.7 Provide two separate high voltage (12,000 – 13,000) primary feeders from 2 independent high voltage transmission lines.

Primary (single metering) is to be utilized and all underground distribution electrical feeders are to be run in conduit.

Underground duct systems are to be run to each unit, support/complex buildings, and facilities and to major on-site utilities such as domestic wells, wastewater treatment plant, and water treatment plant.

Provide conduit for the basic requirements, plus 2 spare conduits for each of the following:

- Telephone
- MATV
- Radio

- Security
- Aims computer
- LAN

1.5.6 EMERGENCY GENERATOR

1.5.6.1 Generator Requirements

1.5.6.1.1 Provide a diesel driven engine generator in a weatherproof enclosure sized to accommodate load plus 25% spare capacity. The generator shall be a four stroke engine. Provide a skid mounted UL listed fuel tank with a 24 hour capacity at full load. All permits required by ADEQ for to the operation of the generator must be included as part of the installation.

1.5.6.1.2 The following loads shall be on the emergency system:

- All security doors
- Master control
- Perimeter & area lighting
- Freezers & refrigerators
- Communications systems (e.g., phone, radio and air conditioner for communication rooms) should be a redundant system.
- Other lighting as specified by ADC
- Equipment room lighting
- Sally ports
- Unit control rooms
- Perimeter electronic security systems
- Computer systems
- Telephone switches
- Communication Rooms
- Waste Water Treatment Plant Lift Stations
- Water distribution systems for both potable and fire fighting water.
- Class “A” Fire Alarm Systems
- Visitation Area Air Handlers (to be used as a refuge in event of a prolonged power outage during summer months.) Each building shall have a transfer switch wired to automatically start the generator when an outage occurs.

1.5.6.1.3 Lighting controls shall be as follows:

1.5.6.1.3.1 Exterior building and site lighting shall be controlled by an astronomic time clock. The time clock shall be digital with battery back up.

1.5.6.1.3.2 Perimeter quartz lights shall be connected to the security system such that 300 linear feet of fence is lighted in the event of a breach in the secured perimeter, along with one 300 foot section adjacent to each side of the alarmed segment.

1.5.7 FIRE ALARM SYSTEMS

1.5.7.1 An addressable Class "A" fire alarm system shall be provided to meet the State of Arizona fire code for all occupancies.

1.5.8 ACOUSTICS: Acoustic quality of spaces in a correctional facility play an important role in improving communication and interaction between staff and inmates, and greatly improve staffs' safety and ability to monitor inmate activities. The materials approved for each building function have been selected to provide improved acoustic and lower dba levels.

1.5.8.1 Sound Level Requirements. The sound levels in inmate occupied areas shall be maximum of 70 dba daytime and 45 dba (using the A scale) at night. Not all areas such as industrial areas will be able to comply with these requirements. Effort shall be made to reduce noise levels where possible. The facility shall make protective ear gear available for all when work levels exceed maximum level.

1.5.9 WATER QUALITY & SYSTEM DESIGN: The following are minimum requirements or water quality and system design. Detail information for water quality shall be as defined in water quality regulation in force in the area of the facility. In addition water treatment plants shall meet the requirements of the Arizona Department of Environmental Quality (ADEQ).

The domestic water source may be supplied by a utility or by the drilling of wells on site. The type of material used for the casing and column shall be based on water quality at the site and shall be selected based on the recommendations of a hydro geologist's analysis of the water composition. Municipal water sources should be utilized whenever possible.

The source of water if on site wells are utilized shall be from two separate, interconnected wells, such that only one well is required to provide the full daily use of the facility. Private utilities must provide written documentation indicating ability to provide two separate sources of water should one source become inoperative.

1.5.9.1 Temperature: Water temperature throughout the State varies, but some areas have excessively high water temperatures. Action may be required to lower drinking water temperatures. Testing should be conducted to verify water conditions.

1.5.9.2 Water Quality: All state and local regulations shall be followed in the design and operation of the water systems. In addition, treatment will be required for all facility domestic water uses if water quality exceeds 600 ppm of dissolved solids. Dental and Kitchen areas shall be further treated to meet or exceed less than 500 ppm of total dissolved solids.

1.5.9.3 Domestic Water and Fire Protection System: On site tank sized to handle storage for fire flows required by code and one days supply for the inmate population based on historic use rates of 200 gallons of domestic water per inmate/day. Staff

consumption of domestic water is included in the 200 gallons usage number of water per day/inmate. These design parameters shall be used for the total number of inmates to be housed at the facility or complex.

The domestic water distribution system that serves more than one building is to be a loop system design with valves that allows the loop to provide continuous operation if a damaged portion of the pipe is shut down during the repair period.

1.5.10 WASTE WATER SYSTEM: The waste water collection system, and on-site treatment plant, if required, is to be designed to handle 187 gallons per inmate per day. If an on-site waste water treatment facility is provided, it shall be equipped with, at minimum:

- Recording flow meters on the intake and discharge side.
- Flow meters on the re-use effluent pumps, if this are provided.
- A muffin monster/grinder on the intake lines.
- Methods of mechanically or manually removing solids and other debris on a daily basis from all ponds.

1.5.11 NATURAL LIGHTING: Natural lighting is an essential part of a quality environment for inmate housing and activity areas. Natural light shall be provided in as many areas as possible where inmate and staff activities take place. The following general requirements shall be incorporated in all housing buildings:

1.5.11.1 Cell housing areas shall have natural light provided in dayrooms and cells as follows:

Dayrooms: Windows or skylights must meet a minimum net glazed area of not less than 8% of the floor area of the room served.

Cells: 1.15 s.f. of glazed area with at least one dimension not exceeding 6". Windows shall be glazed with 1/4" tempered glass or other manufacturer's approved product.

1.5.11.2 Dormitory housing areas shall have natural light provided in living areas as follows:

Sleeping areas and dayrooms: Windows or skylights must meet a minimum net glazed area of not less than 8% of the floor area of the room served.

Dormitory housing areas shall utilize skylights for day lighting when ceilings are 12 feet or higher.

1.5.12 FEMALE FACILITIES SPECIFICATIONS: The Departments standards are based on Prison designs for the adult male population and it is recognized that there are differences in their requirements, security needs and privacy needs. The following is a listing of modifications that shall be made in addressing Adult Female need in facilities designated for their incarceration.

1.5.12.1 Toilet Fixtures: Urinals are not to be provided for female inmates. Substitute china water closets for urinals on a one to one basis. Stainless combination water closets are to be used for Administrative Lock Up and Special Management Inmates.

1.5.12.2 Quiet Room: Adjacent to and accessible from each Dayroom, provide one 200 s.f. Quiet Room with furniture groupings that provide several small, private areas to be used for reading and other low noise functions. Visual observation by the Officers is mandatory.

1.5.12.3 Cell Areas: Provide a cell layout that separates the water closet and the sink from sleeping areas in a manner that provides inmates privacy.

1.5.12.4 Mirrors: Stainless steel mirrors are to be used only in Special Management or Administrative Segregation cells but must be approved for any type of application. Use tempered glass for all other areas.

1.5.12.5 Toilet Areas: Should be designed to provide privacy for female inmates in the water closet areas by installation of doors from plus 12” to plus 48” high with 54” high reinforced masonry partitioned dividers for close and maximum custody levels. Standard commercial toilet partitions shall be utilized in minimum and medium custody levels.

Showers should have opaque curtain material from the knee level to shoulder height to enable Officer’s to view heads and feet of inmates.

1.5.12.6 Visitation areas: Provide a minimum of 300 s.f. of additional space designed and set aside from the General Visitation for Children’s space and play area.

1.5.12.7 Housing Area in Appendix 7.4 Fig. 1: Change the height of the inmate storage locker from 36” to 48”.

1.5.13 Temporary Holding Enclosures: Used to control, confine, or restrict inmate movement on a short term basis. These enclosures can be inside (Mental Health Observation) or outside (Recreation, Central Intake Processing, Medical Waiting Area, Ingress/Egress or Movement Building) and must comply with Department Order 704. The following are required for Outdoor Enclosures:

- Shall be covered to provide shade
- Shall be provided with a misting system or evaporative cooler
- Shall be provided with a continuous source of water for drinking

1.6 COMMON SUPPORT REQUIREMENTS: The support buildings in this section are similar for all levels of security. Variations or special requirements for these buildings at each security level can be found in the corresponding Part of this manual.

It is the intention of ADC that all furniture and fixtures that are manufactured by ACI shall be purchased from ACI, unless a written waiver is secured from the Director or designee. Furniture includes inmate furnishings, office/work areas, millwork, counter and storage, dining and visitation, officer stations, control rooms and cabinets.

1.6.1 FINISH SCHEDULES: Finish schedules for the spaces listed below (that are shared by all prison facilities regardless of level assignment) are located in Appendix VII.

1.6.2 FACILITY ADMINISTRATION/OPERATIONS: The administration and operation functions shall be centrally located within a facility. The Deputy Warden's office on a unit should be located to provide a view of the unit yard(s). Inmates should be restricted from this area. Access to the administrative areas from the inmate yard shall be through controlled entries. The building may be constructed of masonry, concrete (pre-cast or cast-in-place), prefabricated steel buildings, or other materials that meet code requirements.

1.6.2.1 AREA REQUIREMENTS:

1.6.2.1.1 Office/Work Areas: Administrative areas shall provide at a minimum, space for the following functions:

Staff Member	Type of Office	Equipment Required
Warden or Deputy Warden	Private office	work desk, 4 person conference table, credenza, lateral file cabinet and bookcase
A.D.W.	Private office	work desk, 4 person conference table, lateral filing cabinet
General Administrative Offices	Work station (may be modular)	lateral filing cabinet
Operations Offices	Private office	work desk, 2 person conference table, credenza, lateral filing cabinet
Reception and Administrative Support	Open space to accommodate a work station for each staff member	space for lateral filing cabinets and copier and work table
Chaplin, IT, Other Support	Private office	work desk, bookcase and lateral filing cabinet

A stand alone facility will require more offices in the administrative area than a unit administration building. The Department in the design documents or RFP shall define additional spaces.

Inmate record storage facility shall be located outside of the secure perimeter or in a secure portion of the Administration Building. Walls and ceilings, if not constructed of masonry block, shall be

reinforced with expanded metal. Rooms shall have security doors, frames and locks.

1.6.2.1.2 Hygiene Areas: The prison provides conveniently located staff facilities that are appropriately sized to meet the operational needs, including:

- Restricted toilets and wash basins not used by inmates
- Female staff toilets, shower stalls, benches and 3 tier lockers proportioned according to the projected female staff complement in close/maximum custody units.
- Male staff toilets/urinals, shower stalls, benches and 3 tier lockers proportioned according to the projected male staff complement in close/maximum custody units
- Female shower stalls, benches and 3 tier lockers proportioned according to the projected female staff complement in a stand-alone (complex) facility
- Male shower stalls, benches and 3 tier lockers proportioned according to the projected male staff complement in a stand-alone (complex) facility

1.6.2.1.3 Support Areas: Additional spaces shall be provided in proportion to the size of the facility and the number of staff and shall include:

- Conference Room..... To accommodate a minimum of 12 people
- Video / Office..... 160 s.f.
- Copier Room ..... 25 s.f.
- Briefing / Training..... 600 s.f.
- Public Lobby ..... As required.
- Reception/Work Area..... 225 s.f.
- Property Area ..... 120 s.f.
- Storage..... As required

A stand alone (complex) facility will require more support space in the administrative area than a unit administration building.

1.6.2.2 FF&E / Detention Equipment / Special Systems:

1.6.2.2.1 Office / Work Areas: Furniture shall be purchased from ACI and consist of modular furniture systems.

Detention equipment is limited in a Minimum and Medium custody facility. If the facility is a stand alone or complex prison, a weapons storage locker shall be provided near the officer station or control room on the exterior of the building. There shall be a minimum of one locker for every ten employees. Administrative offices shall be protected by security barred windows and appropriate fencing when designed as a part of the perimeter or inside the perimeter in close/maximum.

Special systems for the complex administrative area shall consist of video monitoring equipment and inmate telephone system monitoring station.

1.6.2.2.2 Hygiene Areas: If not furnished at a complex level, the following items shall be provided at a facility or unit administration building in close/maximum custody levels:

- Female staff toilets, shower stalls, benches and 3 tier lockers proportioned according to the projected female staff complement
- Male staff toilets/urinals, shower stalls, benches and 3 tier lockers proportioned according to the projected male staff complement

1.6.2.2.3 Support Areas: The reception area shall be equipped with built-in millwork counter for visitor processing. The counter shall be designed to ADA accessibility requirements.

A metal detector shall be furnished in the visitation lobby area for screening of visitors and staff.

1.6.3 VISITATION: Each facility shall provide space for visitation including contact and non contact areas and in close or maximum facilities, if a part of the facility perimeter, shall be reinforced with #4 bars 8" on center both ways and solid grouted. Visitation areas shall be designed for maximum visibility including exterior visitation areas. Wall of visiting areas shall be of masonry or concrete (or high impact gyp board in minimum/medium facilities). Acoustic quality is very important in the visiting area. Doors in this area will be controlled.

1.6.3.1 Area Requirements: There is adequately designed space to permit registration, screening and searching of both inmates and visitors. Visitation areas shall be provided for each yard within the unit to eliminate inmate's crossing over within the visiting area.

1.6.3.1.1 Work Areas: A minimum of 4000 s.f. shall be provided for a General indoor visiting area. Minimum and Medium custody facilities or units shall have an outdoor visiting area of at least 500 s.f.. This outdoor space shall be enclosed with a 10 foot high fence with one coil of 30" five-point detainer hook and barb concertina razor ribbon attached to the top of the fence. There shall be at least two rooms (80 s.f. minimum) for attorney/client visits that provide a confidential environment.

There shall be a strip search room, which is at least 100 s.f. for each visiting room for searching of inmates before they return to the yard.

Dedicated rooms shall be provided for non-contact visitation and in close/max and there shall be two stations for the first 100 inmates and one additional station for each 100 additional inmates. In minimum/medium facilities there shall be two non-contact visitation stations per 500 inmates. Each station shall be at least 70 s.f.. Non-contact visitation stations may also be designed to be used for attorney/client visits.

A visitation area security (counter) staff station shall be provided.

Vending area shall be provided for a minimum of 6 full sized vending machines in each visiting area.

1.6.3.1.2 Hygiene Areas: Restroom facilities shall be placed inside the visiting room in a location that permits continuous observation by security personnel. There shall be male and female restroom with handicap accessible features for visitors and a separate restroom for inmate use. The doors to toilet rooms shall be lockable with a key operated by staff. Visitor restrooms shall possess a changing table for small children. One high-low drinking fountain shall be provided near the restrooms.

1.6.3.1.3 Support Areas: Janitor rooms shall be provided in each visiting area and shall be large enough to store cleaning equipment and a small supply of toiletries. Janitor room shall be equipped with a janitor sink and mop holder racks. The doors to the janitor rooms shall be lockable with a key operated by staff.

1.6.3.2 FF&E / Detention Equipment / Special Systems

1.6.3.2.1 Visitation Areas: Visitation areas shall be equipped with movable 4 man tables. A work station fabricated of millwork shall be provided for the officer's station.

Non-contact stations shall have communication devices (e.g., phones) or a method that permits the occupants to communicate, without interfering with parties visiting in other non-contact stations. A window frame with secure, passive baffled speaking port built into the frame may be utilized.

Doors and door and window frames in the visiting area shall be constructed of 14 gauge steel. Doors leading to public exits shall be interlocked with another door in a security vestibule.

Visitation areas shall be equipped with a paging or intercom system. Cameras may be required to provide complete coverage of all visiting areas.

1.6.3.2.2 Support Areas: The strip search room shall be equipped with a built-in non-moveable concrete bench in close/maximum custody or steel/wood bench anchored to the floor in minimum/medium custody.

1.6.4 IN-TAKE AND PROCESSING: At the complex level, In-Take and Processing areas shall be located so that the processing of inmates is not visible from the yard. This area shall be accessible from the service yard with bus / van access capability. The space should be of sufficient size to accommodate all functions related to In-Take and Processing.

1.6.4.1 AREA REQUIERMENTS:

1.6.4.1.1 Office/Work Areas: The following areas shall be provided:

- Five offices..... 100 s.f. each
- One count & movement room..... 300 s.f.

1.6.4.1.2 Hygiene Areas: Restrooms shall be provided for both male and female staff and shall be equipped with handicap accessible fixtures. One high-low drinking fountain shall be provided near the restrooms. Inmates shall use an adjacent yard/inmate toilet.

1.6.4.1.3 Support Areas: Support areas consist of a 50 s.f. storage room and a 35 s.f. janitor room. At a stand alone facility, outside holding areas shall be provided adjacent to the in-processing area. Enclosure shall be of chain link fencing material, fully enclosed. Enclosures shall be protected from direct sunlight with a shade structure. The enclosed space will be sufficient to hold 10 inmates in a minimum/medium facility. In close/maximum facilities, individual inmate holding areas of one space per inmate shall be provided.

1.6.4.2 FF&E / Detention Equipment/Special Systems

1.6.4.2.1 Office/Work Areas: Furniture shall be modular systems.

If holding areas are provided, the gates shall be equipped with cuffing slots.

Special systems shall include outlet connections and conduit for the A.I.M.S. computer system.

1.6.5 HEARING: A hearing room and associated support offices shall be developed at each unit or at a central location in the complex.

1.6.5.1 AREA REQUIERMENTS:

1.6.5.1.1 Office/Work Areas: The following spaces shall be provided per hearing area:

- Two private offices ..... 100 s.f. each
- One hearing room..... 240 s.f.

1.6.5.1.2 Hygiene Areas: One unisex toilet shall be provided for staff and shall be handicap accessible or adjacent toilet facilities may be utilized. Inmates shall use an adjacent yard/inmate toilet.

1.6.5.1.3 Support Areas: Storage rooms shall be approximately 60 s.f. in size.

1.6.5.2 FF&E/Detention Equipment/Special Systems

1.6.5.2.1 Office/Work Areas: FF&E shall be modular furniture. Special systems shall consist of cabling for an A.I.M.S. computer terminal.

1.6.6 RESOURCE CENTER: Each unit shall have a Resource Center situated in a physical location that permits appropriate access and traffic flow.

1.6.6.1 AREA REQUIERMENTS:

1.6.6.1.1 Library Areas. General indoor library space shall provide seating and tables for 24 inmates. Library shall be approximately 1,000 s.f. including an office for the Librarian of approximately 100 s.f.

1.6.6.1.2 Hygiene Areas. No toilet facilities shall be provided in the Resource Center. Inmates and staff shall utilize adjacent facilities.

1.6.6.1.3 Support Areas. Support areas consist of one storage room of approximately 100 s.f.

1.6.6.2 FF&E/Detention Equipment / Special Systems:

1.6.6.2.1 Library Areas: Fixed millwork shall be provided for library counter with a swing gate to separate counter area from general library. Within Library provide built-in millwork for six (6) computer work stations with electrical and data outlets.

1.6.7 CLASSROOM: Classrooms shall be distributed equally on each yard and observable by staff through windows from the yard or corridor. Lockable offices shall be enclosed in ceiling height glazing to provide observation of classrooms.

1.6.7.1 AREA REQUIERMENTS:

1.6.7.1.1 Office/Classroom Areas: Classroom area shall be a minimum of 750 s.f. including an Instructor's Office of approximately 200 s.f. Seating shall be provided for a maximum of 25 inmates. A ratio of one classroom for each 200 inmates shall be provided for each unit.

1.6.7.1.2 Hygiene Areas: Inmates shall use the adjacent yard/inmate toilet.

1.6.7.1.3 Support Areas: Lockable storage cabinets shall be furnished in the classrooms for supplies.

1.6.7.2 FF&E/Detention Equipment/Special Systems: Movable furniture shall be used in the classroom. Windows in classrooms that face onto the yard shall be protected by bar grills in close/maximum custody.

1.6.7.2.1 Office/Classroom Areas: Classrooms shall be provided with 13 tables and 26 chairs, two chalk boards or dry erase marker boards, two built-in millwork computer stations and modular office furniture. Storage cabinets shall be millwork. Special systems consist of two jacks for connection of computer workstations.

1.6.8 PROPERTY AND MAIL: Mail and property areas shall be provided on each unit with a roll up door that is accessible by the inmates from the yard. Property storage areas shall be enclosed by a chain link fence and be viewable by staff working in mail and property area. Access shall be provided to the service yard.

1.6.8.1 AREA REQUIERMENTS:

1.6.8.1.1 Property Storage/Work Areas: Property room area shall be a minimum of 1000 s.f. per unit. Mailroom shall be designed to effectively process and distribute mail.

1.6.8.1.2 Hygiene Areas: Inmates shall use the adjacent yard toilet.

1.6.8.2 FF&E/Detention Equipment/Special Systems:

1.6.8.2.1 Property Storage/Work Areas: Property room shall contain storage shelving to house inmate effects. Modular furniture shall be used for workstations.

Detention grade doors and locks shall be used on this area.

Cabling shall be provided for the A.I.M.S. computer terminal.

1.6.9 COUNSELING: In a facility where substance abuse treatment programs are provided as a component of the mission of the facility, dedicated spaces shall be provided as listed below. Windows for visible monitoring of the entire room from outside is preferred for staff safety and security. Substance Group Small Group, Substance Abuse One-on-One Counseling and Case Management /Correctional Additions Officer Counseling Offices shall be sound proof so that conversations are not audible in adjacent areas.

1.6.9.1 AREA REQUIREMENTS: The following counseling spaces shall be provided:

Substance Abuse Large Groups (didactic).... 16-40 students, 600 s.f. minimum
Substance Abuse Small Groups (therapeutic)6-16 students, 240 s.f. minimum
Substance Abuse One-on-One Counseling ... 80 s.f. minimum
Case Management/Correctional Addictions . 100 s.f. minimum.
Officer Counseling Office's..... 100 s.f. minimum

1.6.9.2 FF&E/Detention Equipment/Special Systems:

1.6.9.2.1 Substance Abuse Large Groups (didactic) Shall be equipped with tables and chairs in rows or individual student desks. One wall shall contain a white board. Education classrooms may also be substituted by scheduling.

1.6.9.2.2 Substance Abuse Small Groups (therapeutic) Shall be equipped with movable chairs, and a portable or permanently mounted white board.

1.6.9.2.3 Substance Abuse One-on-one Counseling: Room shall contain two chairs.

1.6.9.2.4 Case Management/Correctional Addictions Officer Counseling Offices: Room shall contain a desk, desk chair and two side chairs.

1.6.10 RECREATION: Outdoor recreation and exercise areas for general population inmates are provided in sufficient number to ensure that each inmate is offered at least one hour of access daily.

1.6.10.1 AREA REQUIREMENTS:

1.6.10.1.1 Recreation Areas: Covered/enclosed multi-purpose areas with 18 foot ceilings must be available for use in inclement weather if the prison is to be located in a geographic region that is above 5000 feet in elevation. Covered/enclosed exercise areas can be designed for multiple uses as long as the design and furnishings do not interfere with scheduled exercise activities. The minimum space requirements for covered/enclosed exercise areas are as follows:

- 10 s.f. per inmate for the maximum number of inmates expected to use the space at one time, but not less than 1,500 s.f. of unencumbered space. (Special Program Units shall have no less than 75 s.f. per inmate while in use by segments of the population) This space shall include a full-court basketball court.

- For each 500 inmates or fraction thereof, provide one granite surface running track, a full-court basketball court and a PAR course. For 1,000 or more inmates, provide one softball field, two full or four half-court basketball courts, one running track, one PAR course and two volleyball courts.

- For each 500 inmates or fraction thereof, provide 300 s.f. of covered shade space.

1.6.10.1.2 Hygiene Areas: Recreation areas are supported by open air yard toilets with a ratio of one combination toilet/urinal/drinking fountain unit per 500 inmates.

1.6.10.1.3 Support Areas: Each prison yard shall have a recreation office and secure storage area of at least 200 s.f..

1.6.10.2 FF&E/Detention Equipment/Special Systems:

1.6.10.2.1 Recreation Areas: The institution (each recreation/field area) shall have a PAR Course per Department specifications (See Part 7, Appendix IV

Special systems include CCTV cameras mounted on yard control building to monitor recreation areas, and site paging system with speakers mounted on area light poles or buildings.

1.6.10.2.2 Hygiene Areas: In Close custody, outdoor urinal partitions shall be provided by ACI and be of a cantilevered design.

1.6.10.2.3 Support Areas. Office shall be equipped with modular office furniture. Equipment storage shall be an enclosed, lockable chain link enclosure.

1.6.11 MEDICAL/DISPENSARY

1.6.11.1 AREA REQUIREMENTS:

1.6.11.1.1 Office/Work Areas: The square footage for the medical facility shall be sized appropriately consistent with the activities of the complex and availability of out-sourced services. Within that area, the following spaces may include:

- Inmate holding cells (close and maximum)
- Secure Medication Storage
- Medication Room
- Medical Records
- Medical Record Storage
- Exam rooms
- Emergency Treatment Room
- Nurse Station
- Telemeter Exam Room
- Blood Lab
- Clean/Soiled Linen
- Library (Medical)
- Staff workspace
- Staff Toilet/Locker rooms
- Staff Break room
- Conference room

1.6.11.2 FF&E/Detention Equipment/Special Systems

In stand alone facilities, the medical facilities may include medical ward beds, single bed medical rooms and isolation rooms

Nurses Line Areas shall be provided in all facilities or units. Refer to 1.6.21 – Nurses Line Area.

1.6.11.1.2 Hygiene Areas: Separate toilet facilities shall be provided for staff and inmates. The ratio of handicap accessible toilets shall be governed by ADA Standards.

1.6.11.1.3 Support Areas: At the complex level, Medical shall contain storage for records, offices and break room for staff, laundry facilities for linens, holding cells for inmates in close/maximum custody, and secure medication storage.

1.6.11.2.1 Office/Work Areas: Institutions with temporary medical storage areas

shall locate such facilities outside of the secure perimeter or in a secure portion of the Administration Building. Rooms shall have security doors, frames and locks. All sinks shall have plaster traps. A dispensary may be located within the secure perimeter for the purpose of dispensing of medication. The dispensary shall have the following:

- A secure pass through for the distribution of medical supplies to staff and inmates shall be located on an exterior wall
- A speaking device/port
- Security doors, frames and locks

Nurse Station shall have the following detention grade components:

- Security doors
- Security frames
- Security locks

Special systems for the medical shall include:

- Security Control systems including door controls (from waiting area to internal corridors), intercom, and camera systems.
- Fire alarm monitoring equipment.
- Phone system
- Radio System
- Dedicated telecommunication cables for Telemeter communications
- Nurse call system

1.6.11.2.2 Support Areas: Staff offices and support areas shall be separated from inmate occupied areas by secure corridors.

1.6.12 LAUNDRY

Close/Maximum Facilities: The central laundry shall be capable of cleaning clothing and bedding for the facility on a defined schedule. Clothing requirements will vary for different climatic regions within the state. ADC will provide clothing requirements. A central laundry shall include a work area, clothing storage, an office with a staff toilet, inmate toilet, janitor's room with a mop sink and secure storage for chemicals.

Minimum/Medium Facilities: Inmates will do their own laundry. 4 each heavy-duty Laundromat type washers and dryers will be installed into each 100 man pod. Dryers will be fueled with natural gas. Appliances will be Energy-Star rated.

1.6.12.1 AREA REQUIREMENTS:

1.6.12.1.1 Office/Work Areas: The size of the central laundry shall be determined by the amount of material to be processed in a 24 hour period. The formula is the weight (pounds) of clothing/day x number of cycles/week. The laundry shall contain a secure office from which the entire laundry can be viewed. Laundry shall contain a separate, secure mechanical room to house water heaters and heat reclamation system (if included).

1.6.12.1.2 Hygiene Areas: Separate toilet facilities shall be provided for staff and inmates.

1.6.12.2 FF&E/Detention Equipment/Special Systems:

1.6.12.2.1 Office / Work Areas: In a central laundry, there shall be a secure corridor behind the washing machines (constructed of chain link fencing) that contains the plumbing and soap/bleach dispensing system.

1.6.13 DENTAL SERVICES

1.6.13.1 AREA REQUIREMENTS: Dental operatories shall be designed with a minimum of 3 chairs per 1000 inmates or be provided as an out-sourced service.

1.6.13.1.1 Office/Work Areas: Dental areas shall be designed within the medical unit for the facility. Required areas are: operatories, lab, offices, x-ray, panorex, secure medication storage and equipment storage.

1.6.13.1.2 Hygiene Areas A separate staff toilet shall be provided adjacent to the dental lab.

1.6.13.2 FF&E / Detention Equipment/Special Systems: Emergency shut-off systems shall be provided for all dental equipment.

1.6.13.2.1 Office/Work Areas: Dental lab shall be furnished with built-in millwork counters and cabinets. All equipment for lab, x-ray and operatories shall be provided by ADC. All sinks to be provided with plaster traps.

1.6.13.2.2 Support Areas: Secure medication storage shall consist of masonry block wall construction (or full-height reinforced walls in minimum/medium custody) with steel security door, frame and lock.

1.6.14 WAREHOUSE

1.6.14.1 AREA REQUIREMENTS: Warehouse shall be located outside the perimeter security fence to allow for deliveries of food and supplies in a non-secure environment. Delivery trucks shall be routed so that they do NOT pass through a vehicle sally port. At minimum, provide a facility sized on the basis of 8-9 s.f. per total inmate population.

1.6.14.1.1 Office/Work Areas: Office areas shall be provided for staff with full view of warehouse and loading dock.

1.6.14.1.2 Hygiene Areas: Separate toilet facilities shall be provided for staff and inmates and be located adjacent to and visible from the warehouse office.

1.6.14.1.3 Support Areas: Warehouse to contain facility telephone room for the routing of lines into the facility.

1.6.14.2 FF&E / Detention Equipment/Special Systems: Door to the warehouse shall be monitored by a security control system from Central Control.

1.6.14.2.1 Office/Work Areas: Storage rack system shall be provided for the storage of bulk materials. Walk-in freezer and cooler may be required for food storage based on the operation of the facility.

1.6.15 MAINTENANCE: Maintenance shall be located outside the facility perimeter in the general area of the Warehouse. A separate storage area for combustible and/or high pressure gases must be provided. The facility shall be capable of providing maintenance for most of the equipment and building systems.

1.6.15.1 AREA REQUIREMENTS:

1.6.15.1.1 Office/Work Areas: In Complex/Standalone facilities Maintenance area shall include a staff office (200 s.f.) with a staff toilet, secure tool storage, inmate toilet, general storage space, and work areas. The size of maintenance area shall be determined by the size of the facility and shall be calculated on 9 s.f. of the total inmate population. If the stand-alone facility is in close proximity to a complex, some of these functions may be outsourced at the complex level. The Maintenance Building shall consist of separate areas for the following functions:

Staff Offices	Conference Room	HVAC Shop
Locksmith	Tool Crib	Plumbing Shop
Carpentry Shop	Electrical Shop	Welding Shop
Electronic Technician Shop	Paint Storage	Secure Storage
Outdoor Work Area	Indoor General Storage	Outdoor General Storage

1.6.15.1.2 Hygiene Areas: Separate toilet facilities shall be provided for staff and inmates.

1.6.15.2 FF&E/Detention Equipment/Special Systems:

1.6.15.2.1 Office/Work Areas: Local area network cabling system shall be provided.

1.6.16 VEHICLE MAINTENANCE: Vehicle maintenance is one of the services that are often contracted out. If the facility size or location warrants a vehicle maintenance facility, the number of vehicle repair bays will be determined by ADC on a project by project basis.

1.6.16.1 AREA REQUIREMENTS:

1.6.16.1.1 Office/Work Areas: The main vehicle maintenance building, if required, shall contain the appropriate number of vehicle maintenance bays, supply and secure storage, tool room, auto technician office and exterior lube and wash bays.

1.6.16.1.2 Hygiene Areas: Separate toilet facilities shall be provided for staff and inmates.

1.6.16.1.3 Support Areas: Vehicle maintenance shall also contain the facility Fire Safety Staff. That area shall consist of fire truck(s) storage, transportation office, fire safety office and break room for the fire crew.

1.6.16.2 Equipment and Accessories: Standard equipment for vehicle maintenance shall consist of:

- Compressed Air (tanks and racks)
- 1 Vehicle Lift per Bay
- Drill Press
- 1 Work Bench per Bay
- Tire Balancer
- Tire Changer
- Alignment Machine
- Brake Lathe

1.6.16.2.1 Office/Work Areas: The Break room shall contain built-in millwork.

1.6.16.2.2 Hygiene Areas: In addition to separate toilet facilities for staff and inmates, a first aid eye wash area shall be included in the general vehicle maintenance area.

1.6.16.2.3 Support Areas: Fire safety shall contain auxiliary equipment to support the individual type of vehicles to be stored (rescue, ladder truck, hose truck, etc.).

1.6.17 PHARMACY: A regional or centralized pharmacy is acceptable to provide deliveries to a facility. Any pharmacy must meet all state regulatory standards. If a pharmacy is to be on-site within the facility and is to be located in the facility administration building to allow unit control room monitoring of deliveries and secure access by staff only. The Pharmacy shall be located outside the perimeter security fence.

1.6.17.1 AREA REQUIREMENTS: Pharmacy square footage is 300 s.f. minimum per AZ board of Pharmacy requirements. If out-sourced, secure on site storage must be provided that meets ADC and State Pharmacy Board requirements.

1.6.17.1.1 Office/Work Areas: The pharmacy shall consist of the following spaces:

- Large Workroom
- Pharmacist's Office

1.6.17.1.2 Hygiene Areas: Staff shall use the toilet facilities provided by the facility administration building in which it is housed.

1.6.17.2 FF&E/Detention Equipment/Special Systems

1.6.17.2.1 Office/Work Areas: Pharmacy shall contain the following:

- Built-in Mill Work (Counters and Storage Cabinets)
- Security Door
- Security Frame
- Security Lock

1.6.18 HAIR CARE: This area shall be located in the facility support building and be accessible from the inmate yard. This area shall include the following:

- 1 Barber Chair per 500 inmates
- Counter space
- Lockable Storage Cabinets
- Sink.

1.6.18.1 AREA REQUIREMENTS

1.6.18.1.1 Office/Work Areas: The square footage for this space is 100 s.f.

1.6.18.2 FF&E/Detention Equipment/Special Systems

1.6.18.2.1 Office/Work Areas: This area shall have a built-in millwork counter tops and storage cabinets.

1.6.19 DETENTION: To the extent feasible, considering staff safety and security requirements, the environment in Detention Housing shall approximate those of the general maximum population. Detention cells enable staff to safely observe and communicate with inmates. A dry cell may be included and used to securely observe an inmate who is suspected of having secreted narcotics or foreign items within their body.

1.6.19.1 AREA REQUIREMENTS: Cells shall be 80 s.f., double occupancy. Detention housing units have an area outside the room or cell for indoor exercise; this area has minimum of 200 s.f. of floor space and at least 35 s.f. of floor space for each inmate who is exercising at any one time.

1.6.19.1.1 Pod Area: The facilities total inmate population determines the number of detention cells required at a ratio of 1 bed for every 26 inmates. The building will be divided into separate pod areas and shall be limited to a maximum of 26 beds in each pod.

1.6.19.1.2 Hygiene Areas: Each cell shall contain a stainless steel lavatory/toilet combination unit.

1.6.19.1.3 Security and Control Areas: Each detention area shall contain an enclosed, secure control room, positioned to allow direct vision into each pod's living, dayroom, and hygiene areas.

The control room shall not be excessive in size, reducing the requirement to move from position to position to observe inmate areas.

Each control room shall have an adjacent toilet room, which can be used by control staff without leaving the control room.

Control rooms are required in Level 3, 4 and Level 5 facilities and may be required in Level 2 facilities depending on operational and security factors. Level 2 and 3 control rooms may be accessed from inmate occupied areas and require only a single security door. Level 2 and 3 control rooms shall have a means of egress for staff to evacuate the control room either through a roof hatch or to a safe area at ground level via an exit door. Level 4 and 5 control rooms shall be equipped with an escape ladder to the roof of the building, and be equipped with a means of securing the hatch from the roof side of the hatch.

1.6.19.1.4 Recreation Areas: One secure, enclosed recreation yard shall be constructed adjacent to the administrative segregation building for the use of the maximum 26 bed pod. The number of enclosures shall be a ratio of 1 per 10 inmates or fraction thereof.

1.6.19.2 FF&E/Detention Equipment/Special Systems

1.6.19.2.1 Pod Area: Each cell shall be equipped with a pneumatic or electro-mechanical locking sliding steel door with locking cuffing slot and viewing panel. Each door will be controlled from the control room. Natural lighting shall be provided by one 8" x 48" barred steel window slot.

1.6.19.2.2 Hygiene Areas: Each cell shall contain a stainless steel lavatory/toilet combination unit with flushing override located in the master control room. Showers door shall be remotely unlocked and remote controlled water shut-offs shall be provided.

1.6.19.2.3 Security and Control Areas: Control room shall contain built-in millwork and computer equipment cabinet. Windows shall be steel, bar construction. Doors and frames shall be security steel construction with security locks.

1.6.20 KITCHEN: The kitchen shall be capable of providing meals for inmates in accordance with ADC's 6-Week Cycle Standard Menu.

1.6.20.1 AREA REQUIREMENTS: Kitchen square footage should be sufficient to provide ample space for equipment and staff/inmates required to produce the number of meals within the serving time allotted.

1.6.20.1.1 Office/Work Areas: The areas comprising the kitchen shall consist of the following:

Kitchen Office	Cooking Kitchen	Toilet Facilities
Walk-in Freezer	Walk in Coolers	Serving Line(s)
Dish Wash	Pot Wash	Clean Dish
Trash Room	Cart Wash	Receiving Dock
Dry Food Storage	Chemical Storage	Secure Storage

Serving or thermalization kitchens utilized in the units of a complex with a central food factory kitchen will not have all of the equipment above. All kitchen equipment must have a "prison security package", no wire racks are allowed in ovens or any other kitchen equipment and no wire rack shelving is allowed.

1.6.20.1.2 Hygiene Areas: Separate toilet facilities shall be provided for staff and inmates.

1.6.20.2 FF&E/Detention Equipment/Special Systems

1.6.20.2.1 Office/Work Areas: The kitchen areas will contain equipment necessary to support the current State of Arizona Correctional Department's prison menu.

1.6.21 NURSES LINE AREA: Each facility or unit that has an inmate population of 800 or more shall incorporate the Nurse Line Area, which provides a medical assessment of inmate health. In minimum/medium facilities, medication and record room walls shall extend to the roof deck and be reinforced with security steel mesh. This area's responsibilities within the nursing protocol will cleanse wounds, provide medications, perform various testing, handle emergencies on the yard, provide temporary care of wounds and broken bones on the yard, administer insulin injections and testing of inmate conditions, assess the inmate status and refer to providers as needed. Female inmates require three to four times the amount of service calls as male inmates.

1.6.21.1 AREA REQUIREMENTS: A typical breakdown of room requirements for each Nurse Line Area is as follows:

- 3 - 120 s.f. Exam Rooms with Delvic Chairs and sink/counter------ 360
- 1 - 120 s.f. Nurse Supervisor Office ---------- 120
- 1 - 160s.f. Waiting Room / Security Entry with 6 Chairs---------- 160
- 2 - 60 s.f. Nurse Assessment Areas ---------- 120
- 1 - 140s.f. Lab Room 10' x 14'---------- 140
- 1 - 100 s.f. Process / Records Room ---------- 100
- 1 - 200 s.f. Storage Room ---------- 200
- 1 - 150 s.f. Medical Records Room ---------- 150
- 2 - 60 s.f. Toilets – 1 Staff and 1 Inmate (testing) ---------- 120
- 2 - 120 s.f. Mental Health Treatment ---------- 240
- Circulation: 30% of Sub-Total:1,710 ---------- 513
- Total S.f.: ---------- 2,223

1.6.21.2 Hygiene Area: Staff and inmates use separate toilets and inmate's toilet will be used for test samples.

1.6.21.3 FF&E/Detention Equipment/Special Systems

- Provide built in cabinets, counter tops with sinks in Exam Rooms, Lab Area, and Nurse Assessment Area.
- Provide for storage for Hazardous materials.

1.6.22 MEDICAL DISPENSARY/MENTAL HEALTH/NURSE LINE

The requirements of separate building area is to be used where an addition of inmate housing is to be added and the complex medical space will not provide for all inmate health needs, exclusive of Pharmacy requirements. This facility is to be located within the perimeter fence of the Unit it serves and is to serve only that population. It should be located to allow for ambulance access. In minimum/medium facilities, medication and record room walls shall extend to the roof deck and be reinforced with security steel mesh.

Provide the following functional spaces:

- Waiting entry area and security desk
- Dental Operator Double if complex dental facilities are not sufficient
- Dental Equipment Room if complex dental facilities are not sufficient
- Dental Lab if complex dental facilities are not sufficient
- Dental Office if complex dental facilities are not sufficient
- Mental Health Offices 2 each
- X-Ray Room if complex x-ray facilities are not sufficient
- Doctor Exam Rooms One per 500 inmates
- Emergency Room
- Nurse Station
- Records
- Narcotic cabinet
- Staff Toilet 1 each Male/Female
- Blood Lab if complex lab facilities are not sufficient
- Inmate Toilet

Following requirements outlined above will negate the space requirements outlined in Paragraph 1.6.11 – Medical/Dispensary, 1.6.13 – Dental Services and 1.6.21 – Nurses Line Area and 6.6 – Complex Medical.

Part 2 – Minimum Security Facility Requirements

2.1 General Facility Requirements
2.1.1 Facility Description 2
2.1.2 Facilities Support Services (Complex Level) 2
2.1.3 Facilities Support Services (Stand Alone Facilities) 2
2.1.4 Facility Size Requirements 2
2.1.5 Physical Security 2

2.2 Building Requirements
2.2.1 Housing 4
2.2.2 Facility/Unit Control 7
2.2.3 Yard Control 8
2.2.4 Commissary 9
2.2.5 Work Based Education 9
2.2.6 Dining/Kitchen 10
2.2.7 Finish Schedule 11

PART 2 MINIMUM SECURITY FACILITY REQUIREMENTS

2.1 GENERAL FACILITY REQUIREMENTS

2.1.1 FACILITY DESCRIPTION: A Minimum Level facility or unit is constructed to house inmates classified as minimum risk to the public. These inmates present a low level of risk to the public community should escape occur from custody. The facility should be capable of restricting inmate movement within the facility. A Minimum facility or unit could be a part of a larger complex of prison units and as such will be referred to as a Minimum unit. Support functions vary if the prison is stand alone or part of a larger complex.

2.1.2 FACILITIES SUPPORT SERVICES (COMPLEX LEVEL): If a Minimum facility is constructed as a part of a larger complex, it can be expected that the unit will be supported by complex wide functions. Warehousing, maintenance, medical services, pharmacy, vehicle maintenance and complex administration are but a few of the centralized functions. Perimeter patrol and monitoring of critical systems such as water supply, wastewater systems and emergency power generation, will be provided at a complex level.

2.1.3 FACILITIES SUPPORT SERVICES (STAND ALONE FACILITIES): If a prison is stand-alone, the support functions will become a part of the facility and must be designed and constructed in accordance with the provisions of those standards. Some services may be furnished from other ADC facilities, and if so, the facility shall take into account those reduced service requirements.

2.1.4 FACILITY SIZE REQUIREMENTS: The maximum inmate population of a Minimum unit is 1000 beds. Physical separation of inmate populations within a unit may be required depending on such circumstances as facility design, staffing patterns, and operational plan. The primary determining objective shall be the need for sound correctional practice, which ensures the safety of staff and inmates as well as effective security. Support and program functions should be designed to minimize inmate movement from yard to yard, and will require some duplication of functions. ADC developed RFPs and Project Descriptions may further define facility services and size requirements.

2.1.5 PHYSICAL SECURITY: The facility shall be designed to withstand abuse, wear and tear, and require relatively low maintenance. Physical security shall be installed as listed in sub-sections below.

2.1.5.1 Perimeter Security: The facilities perimeter security is made up of integrated systems and will provide a relatively good barrier against escape. The institutions perimeter system is designed such that inmates remain within the perimeter and that access by the general public is precluded except with proper authorization. A four strand barb wire barrier fence shall serve as a delineation of prison property. The barb wire fence shall have signage every 100 feet that indicates "**No Trespassing"**. The perimeter security fence shall be located a minimum of 300 feet from the prison property line.

2.1.5.2 Fencing The perimeter fencing shall comply with Appendix III, Figure 1. The perimeter fence shall be a 14 foot high looped top fence (3 foot overhang) with 6 feet of 1/4" security mesh on the inside of the upper portion of the looped top. A single continuous row of 30" 5 point detainer hook and barb concertina razor ribbon shall be installed at the top of the fence. Razor ribbon shall be secured in place by tying to the top tension wire. If the perimeter fence contacts a building, a 30" diameter section of 5 point detainer hook and barb razor ribbon shall be installed vertically at the intersection, on the yard side of the fence. The fence shall have a concrete anti-dig barrier footing 6" wide by 24" deep. The bottom of the fence shall be secured by a (1-1/2" minimum) bottom rail secured to the concrete base by an anchor bolt or method approved by the Department.

- All fence ties shall be equally spaced (5 per 10' section at a minimum). Fence ties and bolts in areas that are in inmate access areas will be mechanically twisted and all straps and bolts shall be tack welded. This also applies to gates, which access those areas.

2.1.5.3 Perimeter and Area Lighting: Lighting on the perimeter shall be sufficient to visually detect movement. Lighting on the vehicle gate and adjacent pedestrian gate shall be at least 5 foot-candles and 2-foot candles on the pedestrian gate and entry to the Administration Building maintained, as documented by an independent, qualified source. Foot-candles listed are minimum maintained. Light poles shall be kept a minimum of 10 feet clear from the inner-most portion of the perimeter fence.

- Minimum facilities shall have a perimeter lighting zone with a two foot candle level. Perimeter zone shall be defined as the area 40' inside the fence to 20' outside the fence. Area lighting is defined as the remainder of the area within the facility from the 40 foot perimeter zone inside dimension and shall be maintained at 0.5 foot candle.

2.1.5.4 CCTV Systems: Closed Circuit Surveillance Cameras shall be positioned to monitor areas of the yard that are not directly visible from the office station in the Administration Building. These cameras shall be monitored from the Facility Control Room. Recording is optional for interior cameras

2.1.5.5 Sand Trap: Outside and adjacent to the perimeter fence, a sand trap shall be constructed and maintained to provide an indication of escape path or fence tampering from outside sources. The trap shall be 15 feet in width and sloped to provide drainage without erosion of sand material.

2.1.5.6 Perimeter Road: A paved perimeter road shall be constructed around the entire Complex facility. The road surface shall be 12 feet wide and have shoulder widths of 6 feet. Turn around shall be provided at each turn in the road and at intervals of 400 yards. A perimeter road is not required on an individual unit within the complex. A perimeter road shall be required at a unit or stand-alone facility that is not in close proximity to a complex.

2.1.5.7 Sally ports: Sally ports for vehicles and or pedestrians are required in a Minimum facility.

2.1.5.8 Pedestrian Entry Gate: There shall be a single point of controlled entry into a Minimum facility or unit. The pedestrian entry gate shall be equipped with a remotely controlled lock on a swing gate. These gates shall be controlled from the facility or unit control room.

2.1.5.9 Vehicle Gate: There shall be one vehicle and pedestrian access on the Perimeter Security Fence per facility. Vehicle gates shall be 14' wide and shall be electrically operated from the Main Officer Station and both gates shall be monitored by a TV camera with a Remote Recording monitored from the Administration Building Officer Station.

- Provide an Intercom box at both the vehicle gate and the pedestrian gate to the Administration Building Officer Control Room.

2.1.5.10 Interior Security: A combination of systems can be utilized to create and secure functions within the perimeter of the facility. The following is the minimum requirements for systems to be utilized.

2.1.5.11 Fencing: Interior fencing shall be provided to define the limits of the inmate yards and provide separation of inmate activity areas. There shall be an interior fence connecting the fronts of all buildings surrounding the yard to provide a complete barrier and define a "No-Man's" Zone behind the buildings. Interior fencing for Minimum yards shall be a straight vertical 10' high fence with one coil of 30" 5 point detainer hook and barb concertina razor ribbon mounted at the top of the fence.

- Outdoor visitation space shall be enclosed with a 10 foot high (minimum) fence with one coil of 30" 5 point detainer hook and barb concertina razor ribbon mounted at the top of the fence.

2.1.5.12 Closed Circuit Surveillance Cameras: Shall be positioned to monitor all areas of the yard that are not directly visible from the Officer Station in the Administration Building. These cameras shall be monitored from the Facility Control. Recording is optional for interior cameras.

2.2 BUILDING REQUIREMENTS

2.2.1 HOUSING: Minimum Custody inmates shall be housed in dormitory style "R" occupancy buildings in Pods of 100 inmates maximum. Optimal number of beds per pod/housing unit will be based on sound correctional practice, which ensures the safety of staff and inmates as well as effective security. The housing unit shall have an officer station for direct supervision, it shall be elevated 2' and located against the wall at the front of each pod. it shall have 2 access points with dutch type doors installed at each capable of observing no more than 2 pods of 100 inmates. Pods in dormitories shall be divided from other adjacent Pods by aisles that are 6 feet minimum width. Buildings shall be constructed to meet "R" occupancy requirements. Exit and entry doors shall be lockable with alarmed emergency egress.

2.2.1.1 AREA REQUIREMENTS

2.2.1.1.1 Pod Area: Housing unit pods shall be developed to house up to a maximum of 100 inmates and have only 2 pods in one area visible from the Officers' station. . Movement between pods shall be restricted by an electronically and manually operated door or gate. Each inmate shall be provided with an individual living space with a gross area of no more than 40 S.F. A diagram of the approved living unit can be found in Appendix IV, Figure 1. In addition to the individual living space, an area shall be provided for code required circulation and access to toilet and shower areas. No aisles shall be less than 48" in width.

2.2.1.1.2 Hygiene Areas: Accessible from each pod shall be a hygiene area(s) equipped with toilets, shower, lavatories, and urinals (male facilities). Toilets and showers shall be provided at a ratio of 1 per 8 inmates. Lavatories shall be provided at a ratio of 1 per 12 inmates. Each hygiene area shall be equipped with at least two ADA compliant accessible toilets, lavatories and showers. In pods with 100 inmates showers and toilets may be limited to 12 each and lavatories may be limited to 8 each. Urinals may replace 1/3 of the required toilets. At least one of the urinals shall be installed in compliance with ADA accessible standards.

- Toilet paper holders, seat cover holders and soap dispensers are not required in these areas. A shelf in which to place toilet paper will be installed at each toilet area.

- A janitor's closet in close proximity to or within the shower and toilet area shall be provided and equipped with a mop sink and mop rack. A faucet with tempered hot and cold water shall be provided for filling of buckets.

2.2.1.1.3 Support Areas: Within each housing building, support area for property, equipment and cleaning supplies storage shall be provided. Storage shall be provided based on the number of inmates housed and shall be a minimum of 100 s.f. and a maximum of 300 s.f. Ceilings in support areas shall be limited to 10 feet in height or less.

2.2.1.1.4 Program Areas: Each housing building shall have area(s) dedicated for multi-purpose program functions. Space shall be provided based on 4 s.f. per inmate with a minimum room size of 250 s.f. Multi-purpose areas shall be observable from the housing control room. Program area shall be separated from living area to provide acoustical separation.

2.2.1.1.5 Officer Station: Each housing building shall be equipped with an officer station, positioned to allow direct vision into each pod's living area, hygiene area, and program area(s). The officer station shall not be excessive in size, approximately 12 ft x 12 ft it shall be elevated 2' and located against the wall at the front of each pod. it shall have 2 access points with dutch type doors installed at each with one opening into it; if designed on an exterior wall two openings may be provided to access the work area, and counter space with lockable drawers and storage compartments. Designed with walls and counters 48 inches high. This allows full vision of all inmate living areas, and other support and hygiene areas.

- If it is determined that a control room is necessary, it will comply with the

requirements of Section 1.6.19.1.3 of this Standard. Each officer station shall have an adjacent toilet room, which can be used by other staff.

- The Officer's Station in Minimum housing can be accessed from inmate occupied areas and is not an enclosed space.

2.2.1.1.6 Recreation Areas: No dedicated indoor recreation area is required within the Minimum units if built at an altitude less than 5000 ft above sea level.

2.2.1.2 FF&E/Detention Equipment/Special Systems

2.2.1.2.1 Pod Area: Individual inmate living areas furniture shall be manufactured by ACI in accordance with diagrams shown in Appendix IV, Figure 1. At least two living spaces in each 100 bed pod shall be designed to provide ADA required accessibility. An additional 6" shall be provided between the bed and the wardrobe unit to provide a 36" clearance. All bolts securing furniture to the floor shall be tack welded.

- Each pod shall be equipped with a gas drop port near the entry to the shower area. The port is utilized by officers on the roof. The port shall extend from 6" above the roof to the ceiling of the dayroom. No other detention equipment is required in the pod areas.

- Each pod shall be equipped with remote lighting control, controlled from the electrical closet immediately adjacent to this living area. The toilet area and dayroom space shall be controlled by different switches. Breaker shall not be utilized for switching.

Each inmate living space shall be equipped with a single duplex power outlet and an MATV outlet, complete with cable system. Cover plates for electrical and cable TV outlets shall be equipped with security type screws.

The facility shall have installed a "collect only" telephone system, with a mechanism to monitor and record conversations. There shall be a minimum of one phone for every 15 inmates located in a position where staff can observe phones used by inmates

2.2.1.2.2 Hygiene Areas: Commercial toilet compartments shall be utilized. Each compartment shall be equipped with a toilet paper holder. Accessible toilet stall shall be equipped with grab bars.

- Hang-proof robe hooks shall be provided at each shower stall or in the drying area adjacent to showers. Robe hooks of a soft material shall be furnished between each lavatory, mirrors shall be furnished at each sink.

- Shower stalls shall be equipped with shower curtains with ceiling mounted tracks, mesh top section down to 60" above the floor, and opaque curtain down to 18" above the floor. ADA accessible showers shall be equipped with grab bars and folding seat. Wheel-in accessible showers 30" x 60" will not require a seat. Accessible showers shall be equipped with a removable, flexible and

hand held shower hose and head. Access panels in shower areas are stainless steel. Shower floor must not hold water; the floor is to slope to drain.

2.2.1.2.3 Support Areas: Storage rooms shall be equipped with high security grade commercial locks and at a minimum a solid wood door. A 5"x24" view panel shall be provided in the door to allow observation of the room by security staff.

2.2.1.2.4 Program Areas: Multi-purpose program areas shall be equipped with MATV system cable and adequate electrical outlets.

2.2.1.2.5 Officer Station: Adequate working surface space shall be provided to accommodate two officers, phone system, radios and writing materials.

- Officer station shall be equipped with radio, phone or intercom systems to allow communication with facility or unit control. Installation of a 1-1/2" conduit with weather head through the roof of the building will be required for a radio antenna.

2.2.2 FACILITY/UNIT CONTROL: Unit or Facility Control is responsible for monitoring activities of the facility complex or unit. In a standalone facility, this control position will also be responsible for monitoring all perimeter activities and systems. Main control rooms shall be constructed to provide view of all areas controlled. Security frames shall be 12 Gauge Steel with 12 Gauge Face sheets.

2.2.2.1 AREA REQUIREMENTS:

2.2.2.1.1 Work Areas: Unit or Facility control rooms shall be designed to allow for three staff working at one time. All support functions shall be accessible without leaving the control room. Approximate area for a central control room shall be 225 s.f.

2.2. 2.1.2 Hygiene Areas: The Main control room officers shall be provided with access to a wash basin and toilet. A procedure shall be established to accommodate staff use of restroom facilities, if there are no facilities directly accessible to the control center.

2.2.2.1.3 Support Areas: In a Stand Alone (not within the complex) Level 2 Facility a secure room shall be provided for the storage and distribution of DART equipment. The room or areas shall have controlled access, electronic monitoring, and be observable from Main Central Control Room.

- Access to a control room shall be through a secure vestibule. The vestibule may serve as controlled access to other facility areas as well as the control room.

2.2.2.2 FF&E/Detention Equipment/Special Systems

2.2.2.2.1 Work Areas: The Officer Station shall be equipped with built-in millwork to accommodate control equipment and provide adequate writing surfaces

for all staff working the control room and storage of miscellaneous control equipment such as radios, chargers, phones, facility computers and procedure manuals. Space should be provided for incorporation of an under counter refrigerator, filing cabinet and a coffee maker.

Special systems for the Officer Station shall include:

- Security Control systems including door controls, intercom, camera and inmate tracking systems.
- Fire alarm monitoring equipment.
- Phone system
- Radio System

2.2.3 YARD CONTROL: Each facility or unit shall have a centralized control and observation post, located in the Administration building, which affords observation of all yard areas. The room is to be located to view both inmate recreation areas and all housing entry doors.

2.2.3.1 AREA REQUIREMENTS:

2.2.3.1.1 Control Areas: The observation posts shall be a minimum of 100 s.f.

2.2.3.1.2 Support Areas: An enclosed room with locking door shall be provided for enclosure of control equipment.

2.2.3.2 FF&E/Detention Equipment/Special Systems

2.2.3.2.1 Control Areas: Built-in millwork shall be provided for installation of control panels and observation of CCTV Monitors and gate controls.

- Detention equipment shall include a pass drawer to each yard and speaking devices to each yard.

Special systems shall include:

- Intercom
- CCTV
- Radio Systems

2.2.4 COMMISSARY: The commissary will provide inmates access to goods and supplies. The commissary shall be placed on each yard and roll up doors shall be observable by yard control. Commissary shall have a roll up delivery door to the service yard. Commissary walls shall extend to the roof deck and be reinforced with security steel mesh.

2.2.4.1 AREA REQUIREMENTS:

2.2.4.1.1 Commissary Areas: A minimum of 960 s.f. of space shall be provided for this function.

2.2.4.1.2 Hygiene Areas: Staff and inmates shall use the adjacent toilet facilities.

2.2.4.2 FF&E/Detention Equipment/Special Systems

2.2.4.2.1 Commissary Areas: Built-in millwork counter top shall be provided in the commissary area for assembly of inmate orders, free standing work table and workstation furniture. Refrigerators and freezers as required.

- Detention equipment shall consist of a security roll up door and pass counter. Rooms shall be equipped with 12 gauge security doors and frames with detention hardware.

2.2.5 WORK BASED EDUCATION: In institutions offering work based educational training programs, classrooms are designed as multi-purpose rooms to offer academic and/or specific training programs, as well as use by various religious groups. 10' wide by 14' high roll up doors shall be included in design for the movement of raw and finished materials. Work based education areas shall be adjacent to the service yard with roll-up doors opening onto service yard. Clearances within the building shall be maintained at 14 ft. Lighting levels in the work based education training areas shall be maintained at 50 ft. candles. Natural lighting shall be provided in work shop areas.

2.2.5.1 AREA REQUIREMENTS: Provide a minimum of 10,000 s.f. for Work Based Educational areas and a minimum of 10,000 s.f. for ACI Industrial areas. Classrooms shall be 750 s.f. and contain seating and tables for a maximum of 25 inmates.

2.2.5.1.1 Office/Work Areas: Staff offices shall be provided with a clear, unobstructed view of work shops and shall have 50 ft. candle maintained level of illumination.

2.2.5.1.2 Hygiene Areas: Separate toilet facilities shall be provided for staff and inmates.

2.2.5.1.3 Support Areas: A minimum of 300s.f. for storage areas shall be provided for materials and tools for each 10,000 s.f. of work based education space. Secure storage shall be provided, if necessary.

2.2.5.2 FF&E/Detention Equipment/Special Systems

2.2.5.2.1 Office/Work Areas: Furniture requirements shall be required by the program provided. Windows to classroom offices or work based educational areas that face onto the yard shall be protected by bar grills.

2.2.5.2.2 Hygiene Areas: Separate toilet facilities shall be provided for staff and inmates in each work based educational area or in a common area to support classroom activities.

2.2.6 DINING/KITCHEN: Dining shall be provided in a dining area. If inmates receive food directly from a kitchen serving line, a blind serving port shall be utilized. The movement of inmates in the serving line shall be controlled by railing to reduce the problem of inmates returning for additional servings. Dining halls shall be designed to serve a maximum of 500 inmates based on serving requirements set forth in **2.2.6.1.1.**

2.2.6.1 AREA REQUIREMENTS

2.2.6.1.1 Dining Areas: Dining areas shall be sized to complete feeding of all meals in one and one half hours with a maximum of four turns, and 20 minutes per turn. The minimum square footage requirement shall be calculated at 7s.f./inmate for dining room seating area.

2.2.6.1.2 Hygiene Areas: Staff and inmates shall use the adjacent toilet facilities.

2.2.6.2 FF&E/Detention Equipment/Special Systems

2.2.6.2.1 Dining Areas: Dining tables shall be constructed of moveable 4-man tables of sturdy construction or 4 man permanently installed tables. Food line shall be separated from main dining area by a 42" high guard rail. Dining areas shall be equipped with a chemical agent drop port from the roof.

2.2.7 FINISH SCHEDULE

Legend: Floors

CAR ..... Carpet
CT..... Ceramic Tile
SC..... Sealed Concrete
VCT..... Vinyl Composition Tile
SC..... Sealed Concrete

Legend: Base
CT..... Ceramic Tile
VIN..... Vinyl Base

Legend: Walls
CONC..... Concrete or masonry block
GYP..... Gypsum Board
FRP..... Fiberglass Reinforced Panels
PE ..... Paint Enamel
EXP ..... Exposed

Legend: Ceiling
AP..... Acoustical Panel
EXP ..... Exposed
GYP..... Gypsum Board

AREA	FLOOR	BASE	WALLS	CEILING	HT
Facility Control					
Office	VCT OR SC	VIN	GYP/PE	AP	9'-0"
Work Areas	CAR	VIN	GYP/PE	AP	9'-0"
Toilet	CT	CT	CT	GYP	8'-0"
Support	CAR	VIN	GYP/PE	GYP	9'-0"
Commissary					
Commissary	SC		CONC/PE	EXP	9'-0"
Dining					
Dining	SC	VIN	CONC GYP/PE	EXP	12'-0"
Housing					
Pod/ Day Room	SC		GYP / RFP	AP or EXP	15'-0"
Toilets/Showers	CT	CT	CT	GYP	10'-0"
Support	SC		GYP RFP	GYP	9'-0"
Program	VCT		GYP	AP	9'-0"
Officer Station	SC	VIN	GYP/PE	AP or EXP	8'-0"
WORK BASED EDUCATION					
Office	VCT	VIN	GYP/PE	AP	9'-0"
Work Areas	SC		EXP or GYP/FRP	EXP	
Toilets	CT	CT	CT	GYP	8'-0"
Support	SC		GYP	EXP	8'-0"
Yard Control					
Control	VCT	VIN	GYP	AP	8'-0"
Toilet	CT	CT	CT	GYP	8'-0"
Support	VCT	VIN	GYP	EXP	8'-0"

Part 3 – Medium Security Facility Requirements

3.1 General Facility Requirements
3.1.1 Facility Description 2
3.1.2 Facilities Support Services (Complex Level) 2
3.1.3 Facilities Support Services (Stand Alone Facilities) 2
3.1.4 Facility Size Requirements 2
3.1.5 Physical Security 2

3.2 Building Requirements
3.2.1 Housing 5
3.2.2 Facility/Unit Control 7
3.2.3 Yard Control 8
3.2.4 Commissary 9
3.2.5 Work Based Education 9
3.2.6 Dining/Kitchen 10
3.2.7 Finish Schedule 11

PART 3 MEDIUM SECURITY CUSTODY FACILITY REQUIREMENTS

3.1 GENERAL FACILITY REQUIREMENTS

3.1.1 FACILITY DESCRIPTION: A Medium facility or unit is constructed to house inmates whose public risk is medium. These inmates present a moderate risk to the public community should escape occur from custody. The facility should be capable of restricting inmate movement within the facility and must be constructed to a I-3 condition 2 occupancy standard per the IBC. A Medium Custody facility could be a part of a larger complex of prison units and as such will be referred to as a Medium Custody unit. Support functions vary if the prison is stand alone or part of a larger complex.

3.1.2 FACILITIES SUPPORT SERVICES (COMPLEX LEVEL): If a Medium prison is constructed as a part of a larger complex it can be expected that the unit will be supported by complex wide functions. Warehousing, maintenance, medical services, pharmacy, vehicle maintenance and complex administration are but a few of the centralize functions. Perimeter patrol and monitoring of critical systems such as water supply, wastewater systems and emergency power generation, will be provided at a complex level.

3.1.3 FACILITIES SUPPORT SERVICES (STAND ALONE FACILITIES): If a prison is stand alone, the support functions will become a part of the facility, and must be designed and constructed in accordance with the provisions of these standards. Some services may be furnished from other ADC facilities and if so the facility shall take into account those reduced service requirements.

3.1.4 FACILITY SIZE REQUIREMENTS: The maximum inmate population of a Medium unit is 1,000 beds. Physical separation of inmate populations within a unit may be required depending on such circumstances as facility design, staffing patterns, and operational plan. At minimum a 1,000 bed unit must be designed to divide the recreation area into two 500 inmate yards. The primary determining objective shall be the need for sound correctional practice, which ensures the safety of staff and inmates as well as effective security. Support and program functions should be designed to minimize inmate movement from yard to yard, and will require some duplication of functions. ADC developed RFP's and Project Descriptions may further define facility services and size requirements.

3.1.5 PHYSICAL SECURITY: Due to the moderate level of escape risk of Medium Custody inmates, the facility is designed with a moderate level of physical security. The facility shall be designed to withstand abuse, wear and tear, and require relatively low maintenance. Physical Security shall be installed as listed in sub-sections below.

3.1.5.1 Perimeter Security: The facilities' perimeter security is made up of integrated systems and will provide a good barrier against escape. The institution's perimeter system is designed such that inmates remain within the perimeter and that access by the general public is precluded except with proper authorization. A four strand barb wire barrier fence shall serve as a delineation of prison property. The barb wire fence shall have signage every 100 feet that indicates **"No Trespassing"**. The perimeter security fence shall be located a minimum of 300 feet from the prison property line.

3.1.5.1.1 Fencing: The perimeter fencing shall comply with Appendix III, Figure 2. A Medium facility shall have a single perimeter fence which serves as a physical containment barrier. The perimeter fence shall be 14 foot high looped top fence with 6 feet of 1/4" security mesh on the inside of the upper portion of the looped top. The perimeter fence shall contain one 30" diameter 5 point detainer hook and barb concertina razor ribbon row at the top and three rows at the bottom, one directly above the other starting at grade. If the perimeter fence contacts a building, a 30" diameter section of 5 point detainer hook and barb razor ribbon shall be installed vertically at the intersection, on the yard side of the fence. The fence shall have a concrete anti-dig barrier footing 6" wide by 24" deep. The bottom of the fence shall be secured by a (1-1/2" minimum) bottom rail secured to the concrete base by a anchor bolt or method approved by the Department.

- All fence ties shall be equally spaced (5 per 10' section at a minimum). Fence ties shall be mechanically twisted and all straps and bolts in areas that may permit inmate access shall be tack welded. This also applies to gates, which access those areas.

- A single continuous row of 30" 5 point detainer hook and barb concertina razor ribbon shall be installed at the top of the fence and 3 rows of 30" diameter 5 point detainer hook and barb razor ribbon shall be stacked vertically on the yard side base of the fence beginning at grade and fastened securely to the fence with metal ties spaced every 3 feet Top of fence Razor ribbon shall be secured in place by tying to the top tension wire.

3.1.5.1.2 Detection Systems: Electronic detection system will be placed as indicated in Figure 2, Appendix III in the form of ported cable. The alarm system shall be broken up into zones with zone links of approximately 300 feet. An alarm condition will trigger the quartz lights associated with the alarmed zone and one lighting zone adjacent to either side of the alarmed zone. Notification of an alarm condition will be received by the unit control room.

3.1.5.1.3 Perimeter and Area Lighting: Lighting on the perimeter shall be sufficient to visually detect movement. Lighting on the vehicle sally port is at least 5 foot-candles and 2-foot candles to the pedestrian sally port at the lowest level, as documented by an independent, qualified source. Foot-candles listed are minimum maintained. Light poles shall be kept a minimum of 10 feet clear from the inner-most portion of the perimeter fence. There shall be supplemental quartz light system outside the perimeter fence consisting of 1500 watt quartz fixtures or metal halide lights of a wattage to provide the required foot-candles mounted on 10 foot high poles, spaced 75 feet on center and installed 5 feet clear of the exterior perimeter fence.

3.1.5.1.3.1 Medium facilities shall have perimeter lighting zone with a two foot candles level. Perimeter zone shall be defined as the area 40' inside the fence to 20' outside the fence.

3.1.5.1.3.2 Area lighting is defined as the remainder of the area within the facility from the 40 foot perimeter zone inside dimension and shall be maintained at one foot candle.

3.1.5.1.4 CCTV Systems: Closed Circuit Television cameras shall be installed to monitor both the pedestrian and vehicle sally ports. Cameras shall be monitored from the facility control room. Recording of the cameras is optional but highly recommended. Closed circuit surveillance cameras shall be positioned to monitor any area of the yard that is not directly visible from a control room. These cameras shall be monitored from facility control. Recording is optional for interior cameras.

3.1.5.1.5 Sand Trap: Outside and adjacent to the perimeter fence, a sand trap shall be constructed and maintained to provide an indication of escape path or fence tampering from outside sources. The trap shall be 15 feet in width and sloped to provide drainage without erosion of sand material.

3.1.5.1.6 Perimeter Road: A paved perimeter road shall be constructed around the entire Complex facility. The road surface shall be 12 feet wide and have shoulder widths of 6 feet. Turn around shall be provided at each turn in the road and at intervals of 400 yards. A perimeter road is not required on an individual unit within the complex. A perimeter road shall be required at a unit or stand-alone facility that is not in close proximity to a complex.

3.1.5.1.7 Sally ports: Sally ports for vehicles and or pedestrians are required in a Medium Facility.

3.1.5.1.8 Pedestrian Entry Gate: There shall be a single point of controlled entry into a Medium facility or unit. The pedestrian entry gate shall be equipped with a remotely controlled lock on a swing gate. These gates shall be controlled from the facility or unit control room.

3.1.5.1.9 Vehicle Gate: There shall be one vehicle and pedestrian access on the Perimeter Security Fence per facility. Vehicle gates shall be 14' wide and shall be electrically operated from the Main Officer Station or sally port building and both gates shall be monitored by a TV camera with a Remote Recording monitored from the Administration Building Officer Station.

- Provide an Intercom box at both the vehicle gate and the pedestrian gate to the Administration Building Officer Control Room.

3.1.5.2 Interior Security: A combination of systems can be utilized to create and secure functions within the perimeter of the facility. The following is the minimum requirements for systems to be utilized.

3.1.5.2.1 Fencing: Interior fencing shall be provided to define the limits of the inmate yards and provide separation of inmate activity areas. There shall be an interior fence connecting the fronts of all buildings surrounding the yard to provide a complete barrier and define a "**No-man's Zone"** behind the buildings. Interior fencing for Medium Custody yards shall be a straight vertical 10' high fence with one coil of 30" 5 point detainer hook and barb concertina razor ribbon mounted on top. No-climb (1/4" hardware cloth) shall be installed for a distance of 6' on both sides of the interior fence, where an interior fence contacts the perimeter fence and at building.

Outdoor visitation space shall be enclosed with a 10 foot high (minimum) fence and 1 coil of 30" 5 point detainer hook and barb concertina razor ribbon mounted around the top of the enclosure.

3.2 BUILDING REQUIREMENTS

3.2.1 Medium Custody inmates may be housed in dormitory or cell style buildings. Optimal number of beds per pod/housing unit will be based on sound correctional practice, which ensures the safety of staff and inmates as well as effective security. The housing unit shall have a control room per section 1.6.19.1.3, centrally located, capable of directly observing no more than 6 pods within a maximum of a 180 degree field of view. Pod size shall be limited to a maximum of 50 inmates per pod in dormitory style buildings. No more than 200 inmates shall be monitored by each control room officer for dormitory style buildings. Buildings shall be constructed to meet an I-3 condition 2 occupancy requirement. Exit and entry doors into the Pod areas shall be lockable. Movement between pods shall be restricted by an electronically and manually operated door or gate. Building may be constructed of masonry, concrete (pre-cast or cast-in-place), pre-engineered metal building or other materials that meet the above and code requirements.

3.2.1.1 AREA REQUIREMENTS

3.2.1.1.1 Pod Area: Each inmate shall be provided with an individual living space with a gross area of 40 s.f. A diagram of the approved living unit can be found in Appendix IV, Figure 1. In addition to the individual living space, area shall be provided for code required circulation and access to toilet and shower areas. No aisles shall be less than 48" in width.

3.2.1.1.2 Hygiene Areas: Accessible in each pod shall be a hygiene area(s) equipped with toilets, shower, lavatories, and urinals (male facilities). Toilets and showers shall be provided at a ratio of 1 per 8 inmates. Lavatories shall be provided at a ratio of 1 per 12 inmates. Each hygiene area shall be equipped with at least one ADA compliant accessible toilet, lavatory and shower. Urinals may replace 1/3 of the required toilets. At least one of the urinals shall be installed in compliance with ADA accessible standards. Toilet paper, toilet seat cover, and soap dispensers are not required to be installed in these hygiene areas. A shelf to hold toilet paper will be installed at each toilet.

- A space within or in close proximity to the shower and toilet area shall be

provided and equipped with a mop sink and mop rack. A faucet with tempered hot and cold water shall be provided for filling of buckets.

3.2.1.1.3 Support Areas: Within each housing building, support area for property, equipment and cleaning supplies storage shall be provided. Storage shall be provided based on the number of inmates housed and shall be calculated at 8 cu. ft. per inmate. Ceilings in support areas shall be limited to 10 feet in height.

3.2.1.1.4 Program Areas: Each housing building shall have area(s) dedicated for multi-purpose program functions. Space shall be provided based on 4 s.f. per-inmate with a minimum room size of 250 s.f. Multi-purpose areas shall be observable from the housing Officer Station. Program areas shall be separated from living area to provide acoustical separation.

3.2.1.1.5 Security and Control Areas: Each housing building shall be equipped with a control room per section 1.6.19.1.3, positioned to allow direct vision into each pods living, hygiene and program area(s). The control room shall not be excessive in size, approximately 12 ft x 12 ft and counter space with lockable drawers and storage compartments. Designed with counters on walls 48 inches high. The control room will comply with the requirements of 1.6.19.1.3.

- The control room in Medium Custody housing can be accessed from inmate occupied areas.

3.2.1.1.6 Recreation Areas: No dedicated indoor recreation area is required within the Medium housing units.

3.2.1.2 FF&E/Detention Equipment/Special Systems

3.2.1.2.1 Pod Area: Individual inmate living areas furniture shall be manufactured by ACI in accordance with diagrams shown in Appendix IV, Figure 2. At least two (2) living spaces in each 50 bed pod shall be designed to provide ADA required accessibility. An additional 6" shall be provided between the bed and the wardrobe unit to provide a 36" clearance.

- Tack weld all bolts securing the furniture to the floor within inmate accessible areas.

- Each pod shall be equipped with a gas drop port near the entry to the shower area. The port is utilized by officers on the roof. The port shall extend from 6" above the roof to the ceiling of the dayroom. No other detention equipment is required in the pod areas.

- Each pod shall be equipped with remote lighting control, controlled from the adjacent electrical closet.

- The toilet area and dayroom space shall be controlled by different switches. Breaker shall not be utilized for switching.

- Each inmate living space shall be equipped with a single duplex power outlet

and an MATV outlet, complete with cable system. Cover plates for electrical and cable TV outlets shall be equipped with security type screws.

- The prison shall have installed a **collect only** telephone system, with a mechanism to monitor and record conversations. There shall be a minimum of one phone for every 15 inmates located in a position where staff can observe phones used by inmates.

3.2.1.2.2 Hygiene Areas: Each toilet shall be equipped with Commercial toilet partitions. Each compartment shall be equipped with a toilet paper holder. Accessible toilet stall shall be equipped with grab bars.

- Hang-proof robe hooks of a soft material shall be provided at each shower stall or in the drying area adjacent to showers. Robe hooks shall be furnished between each lavatory.

- Mirrors shall be furnished at each sink.

- Shower stalls shall be equipped with shower curtains with ceiling mounted tracks, mesh top section down to 60" above the floor, and opaque curtain down to 18" above the floor. ADA accessible showers shall be equipped with grab bars and folding seat. Wheel-in accessible showers 30" x 60" will not require a seat. Accessible showers shall be equipped with a removable, flexible and hand held shower hose and head. Access panels in shower areas are stainless steel.

3.2.1.2.3 Support Areas: Storage rooms shall be equipped with high security grade commercial locks and at a minimum a solid wood door. A 5" x 24" view panel shall be provided in the door to allow observation of the room by security staff.

3.2.1.2.4 Program Areas: Multi-purpose program areas shall be equipped with MATV system cable and adequate electrical outlets.

3.2.1.2.5 Security and Control Areas: Control consoles shall be installed in built-in millwork or electronic equipment enclosures. Adequate working surface space shall be provided to accommodate two officers, phone system, radios and writing materials.

- Control room shall be equipped with radio, phone or site intercom systems to allow communication with facility or unit control. Installation of a 1-1/2" conduit with weather head through the roof above the officer station will be required for radio antenna.

3.2.2 FACILITY/UNIT CONTROL: Unit or Facility Control is responsible for monitoring activities of the facility (standalone) or unit (complex). In a standalone facility, this control position will also be responsible for monitoring all perimeter activities and systems. Control rooms shall be constructed to provide view of all areas controlled. Wall shall be reinforced steel security mesh. Security frames shall be 12 gauge Steel with 12 gauge face sheets.

3.2.2.1 AREA REQUIREMENTS

3.2.2.1.1 Work Areas: Unit or Facility control rooms shall be designed to allow for three staff working at one time. All support functions shall be accessible without leaving the control room. Approximate area for a central control room shall be 225 s.f.

3.2.2.1.2 Hygiene Areas: The control room officers shall be provided with access to a wash basin and toilet. A procedure shall be established to accommodate staff use of restroom facilities, if there are no facilities directly accessible to the control center.

3.2.2.1.3 Support Areas: A secure room shall be provided for the storage and distribution of DART equipment. In a complex or stand-alone facility the room or areas shall have controlled access, electronic monitoring, and be observable from Main central control.

- Access to a control room shall be through a secure vestibule. The vestibule may serve as controlled access to other facility areas as well as the control room

3.2.2.2 FF&E/Detention Equipment/Special Systems

3.2.2.2.1 Work Areas: The officer station shall be equipped with built-in millwork to accommodate control equipment and provide adequate writing surfaces for all staff working the control room and storage of miscellaneous control equipment such as radios, chargers, phones, facility computers and procedure manuals. Space should be provided for incorporation of an under counter refrigerator, filing cabinet and a coffee maker.

Special systems for the officer station shall include:

- Security Control systems including door controls, intercom, camera and inmate tracking systems.
- Fire alarm monitoring equipment.
- Phone system
- Radio System

3.2.3 YARD CONTROL: Each facility or unit shall have a centralized control and observation post, located in the Administration building, which affords observation of all yard areas. The room is to be located to view both inmate recreation areas and all housing entry doors.

3.2.1.1 AREA REQUIERMENTS

3.2.3.1.1 Control Areas: The observation posts shall be a minimum of 100 s.f.

3.2. 3.1.2 Support Areas: An enclosed room with locking door shall be provided for enclosure of control equipment.

3.2.3.2 FF&E / Detention Equipment / Special Systems.

3.2.3.2.1 Control Areas: Built-in millwork shall be provided for installation of control panels and observation of CCTV Monitors and gate controls.

- Detention equipment shall include a pass drawer to each yard and speaking devices to each yard.

- Special systems shall include intercom, CCTV, and radio systems.

3.2.4 COMMISSARY: The commissary will provide inmates access to goods and supplies on a controlled basis. Delivery method for commissary goods is optional for Medium Custody facilities. Pre-bagged and delivered to housing areas is an option to a yard based pick-up commissary. If yard pick-up is utilized, the commissary shall be placed on each yard and roll up doors shall be observable by yard control. Commissary shall have a roll up delivery door to the service yard. Commissary walls shall extend to the roof deck and be reinforced with security steel mesh.

3.2.4.1 AREA REQUIREMENTS:

3.2.4.1.1 Commissary Areas: A minimum of 960 s.f. of space shall be provided for this function.

3.2.4.1.2 Hygiene Areas: Staff and inmates shall use the adjacent toilet facilities.

3.2.4.2 FF&E/Detention Equipment/Special Systems

3.2.4.2.1 Commissary Areas: Built-in millwork counter in commissary area for assembly of inmate orders, free standing work table and workstation furniture. Refrigerators and freezers as required.

- Detention equipment shall consist of a security roll up door and pass counter. Rooms shall be equipped with 12 gauge security doors and frame and detention hardware.

3.2.5 WORK BASED EDUCATION: In institutions offering work based educational training programs, classrooms are designed as multi-purpose rooms to offer academic and/or specific training programs, as well as use by various religious groups. 10' wide by 14' high roll up doors shall be included in design for the movement of raw and finished materials. Work based education areas shall be adjacent to the service yard with roll-up doors opening onto service yard. Clearances within the building shall be maintained at 14 ft. Lighting levels in the work based education training areas shall be maintained at 50 ft. candles. Natural lighting shall be provided in work shop areas.

3.2.5.1 AREA REQUIREMENTS: Provide a minimum of 10,000 s.f. for Work Based Educational areas and a minimum of 10,000 s.f. for ACI Industrial areas. Classrooms shall be 750s.f. and contain seating and tables for a maximum of 25 inmates.

3.2.5.1.1 Office/Work Areas: Staff offices shall be provided with a clear, unobstructed view of work shops.

3.2.5.1.2 Hygiene Areas: Separate toilet facilities shall be provided for staff and inmates.

3.2.5.1.3 Support Areas: A minimum of 300s.f. for storage areas shall be provided for materials and tools for each 10,000 s.f. of work based education space. Secure storage shall be provided, if necessary.

3.2.5.2 FF&E/Detention Equipment/Special Systems

3.2.5.2.1 Office/Work Areas: Furniture requirements shall be required by the program provided. Windows to classroom offices or work based educational areas that face onto the yard shall be protected by bar grills. Exit doors to service yards or no-man areas shall be alarmed

3.2.5.2.2 Hygiene Areas: Toilets for use by inmates and staff shall be provided in each work based educational areas or in a common area to support classroom activities.

3.2.6 DINING/KITCHEN: Dining shall be provided in a dining area. If inmates receive food directly from a kitchen serving line, a blind serving port shall be utilized. The movement of inmates in the serving line shall be controlled by railing to reduce the problem of inmates returning for additional servings. Dining halls shall be designed to serve a maximum of 500 inmates based on serving requirements set forth in 3.2.6.1.1.

3.2.6.1 AREA REQUIREMENTS:

3.2.6.1.1 Dining Areas: Dining areas shall be sized to complete feeding of all meals in one and one half hours with a maximum of four turns, and 20 minutes per turn. The minimum Square footage requirement shall be calculated at 7s.f./inmate for dining room seating area.

3.2.6.1.2 Hygiene Areas: Staff and inmates shall use the adjacent toilet facilities for Dining Area. Separate toilet facilities shall be provided for staff and inmates within the Kitchen area.

3.2.6.2 FF&E/Detention Equipment/Special Systems

3.2.6.2.1 Dining Areas: Dining tables shall be constructed of moveable 4-man tables. Food line shall be separated from main dining area by a 32" high guard rail.

- Dining areas shall be equipped with a chemical agent drop port from the roof.

3.2.7 FINISH SCHEDULE

Legend: Floors

CAR ..... Carpet
CT..... Ceramic Tile
SC..... Sealed Concrete
VCT..... Vinyl Composition Tile
SC..... Sealed Concrete

Legend: Base
CT..... Ceramic Tile
VIN..... Vinyl Base

Legend: Walls
CONC..... Concrete or masonry block
GYP..... Gypsum Board
FRP..... Fiberglass Reinforced Panels
PE ..... Paint Enamel
EXP ..... Exposed

Legend: Ceiling
AP..... Acoustical Panel
EXP ..... Exposed
GYP..... Gypsum Board

AREA	FLOOR	BASE	WALLS	CEILING	HT
Facility Control					
Office	VCT OR SC	VIN	GYP/PE	AP	9'-0"
Work Areas	CAR	VIN	GYP/PE	AP	9'-0"
Toilet	CT	CT	CT	GYP	8'-0"
Support	CAR	VIN	GYP/PE	GYP	9'-0"
Commissary					
Commissary	SC		CONC/PE	EXP	9'-0"
Dining					
Dining	SC	VIN	CONC GYP/PE	EXP	12'-0"
Housing					
Pod/ Day Room	SC		GYP / RFP	AP or EXP	15'-0"
Toilets/Showers	CT	CT	CT	GYP	10'-0"
Support	SC		GYP RFP	GYP	9'-0"
Program	VCT		GYP	AP	9'-0"
Officer Station	SC	VIN	GYP/PE	AP or EXP	8'-0"
WORK BASED EDUCATION					
Office	VCT	VIN	GYP/PE	AP	9'-0"
Work Areas	SC		EXP or GYP/FRP	EXP	
Toilets	CT	CT	CT	GYP	8'-0"
Support	SC		GYP	EXP	8'-0"
Yard Control					
Control	VCT	VIN	GYP	AP	8'-0"
Toilet	CT	CT	CT	GYP	8'-0"
Support	VCT	VIN	GYP	EXP	8'-0"

Part 4 Close Security Facility Requirements

4.1 General Facility Requirements

4.1.1 Facility Description 2
4.1.2 Facilities Support Services (Complex Level) 2
4.1.3 Facilities Support Services (Stand Alone Facilities) 2
4.1.4 Facility Size Requirements 2
4.1.5 Physical Security 2

4.2 Building Requirements

4.2.1 Housing 5
4.2.2 Facility/Unit Control 7
4.2.3 Yard Control 8
4.2.4 Commissary 9
4.2.5 Work Based Education 10
4.2.6 Dining 10
4.2.7 Finish Schedule 11

PART 4 CLOSE SECURITY FACILITY REQUIREMENTS

4.1 GENERAL FACILITY REQUIREMENTS

4.1.1 FACILITY DESCRIPTION: A Close Security facility or unit is constructed to house inmates whose public risk is high. These inmates present a moderately high risk to the public should escape from custody occur. The facility should be capable of restricting inmate movement within the facility. A Close facility could be a part of a larger complex of prison units.. Support functions vary if the prison is stand alone or part of a larger complex.

4.1.2 FACILITIES SUPPORT SERVICES (COMPLEX LEVEL): If a Close facility is constructed as a part of a larger complex it can be expected that the unit will be supported by complex wide functions. Warehousing, maintenance, medical services, pharmacy, vehicle maintenance and complex administration are but a few of the centralize functions. Perimeter patrol and monitoring of critical systems such as water supply, wastewater systems and emergency power generation, will be provided at a complex level.

4.1.3 FACILITIES SUPPORT SERVICES UNIT: If a prison is stand-alone, the support functions will become a part of the facility, and must be designed and constructed in accordance with the provisions of these standards. Some services may be furnished from other ADC facilities, and if so the facility shall take into account those reduced service requirements.

4.1.4 FACILITY SIZE REQUIREMENTS: The maximum inmate population of a Level 4 unit is 1000 beds. Physical separation of inmate populations within a unit may be required depending on such circumstances as facility design, staffing patterns, and operational plan and at the minimum; an 1000 bed unit is to be designed to divide the recreation area into two 500 inmate yards. The primary determining objective shall be the need for sound correctional practice, which ensures the safety of staff and inmates as well as effective security. Support and program functions should be designed to minimize inmate movement from yard to yard, and will require some duplication of functions. ADC developed RFP's and Project Descriptions may further define facility services and size requirements.

4.1.5 PHYSICAL SECURITY: Due to the high level of escape risk of Close Custody inmates, the facility is designed with a high level of physical security. The facility shall be designed to withstand abuse, wear and tear, and require relatively low maintenance. Physical Security shall be installed as listed in the sub-sections below.

4.1.5.1 Perimeter Security: The facilities perimeter security is made up of integrated systems and will provide a good barrier against escape. The institution's perimeter system is designed such that inmates remain within the perimeter and that access by the general public is precluded except with proper authorization. A four strand barb wire barrier fence shall serve as a delineation of prison property. The barb wire fence shall have signage every 100 feet that indicates "No Trespassing".The perimeter security fence shall be located a minimum of 300 feet from the prison property line.

4.1.5.1.1 Fencing: The perimeter fencing shall comply with Appendix III, Figure 3. A Level 4 facility shall have a double perimeter fence which serves as a physical containment barrier. An additional "**No-Man's Zone**" fence shall be provided consisting of a four foot, four stand barbed wire fence denoting the interior perimeter of the no-man zone. Both perimeter fences shall be 14 foot high looped top fence with 6 feet of 1/4" security mesh on the inside of the upper portion of the looped top. Both perimeter fences shall contain one 30" 5 point detainer hook and barb diameter concertina razor ribbon row at the top and three rows, one directly above the other starting at grade. If the perimeter fence contacts a building, a 30" diameter section of razor ribbon shall be installed vertically at the intersection, on the yard side of the fence. The fence shall have a concrete anti-dig barrier footing 6" wide by 24" deep. The bottom of the fence shall be secured by a (1-1/2" minimum) bottom rail secured to the concrete base by a anchor bolt or method approved by the Department.

- All fence ties shall be equally spaced (5 per 10' section at a minimum). Fence ties and bolts in areas that may permit inmate access shall be tack welded (e.g., exercise, work, trash etc.). Any fenced area that serves as a temporary inmate holding area (e.g., recreation, health unit, intake, transportation, detention unit holding areas, etc.) shall use permanent straps to attach fabric to poles which shall be bolted and tack welded. This also applies to gates, which access those areas.

4.1.5.1.2 Detection Systems: Electronic detection system will be placed as indicated in Figure 3, Appendix III. The alarm system shall be broken up into zones with zone links of approximately 300 feet. An alarm condition will trigger the quarts lights associated with the alarmed zone and one lighting zone adjacent to either side of the alarmed zone. Notification of an alarm condition will be received by the unit control room

4.1.5.1.3 Perimeter and Area Lighting: Lighting on the perimeter shall be sufficient to visually detect movement. Lighting on the vehicle sally port is at least 5 foot-candles and 2-foot candles to the pedestrian sally port at the lowest level, as documented by an independent, qualified source. Foot-candles listed are minimum maintained. Light poles shall be kept a minimum of 10 feet clear from the inner-most portion of the perimeter fence. There shall be a supplemental quartz light system outside the perimeter fence with 1500 watt quartz fixtures or metal halide fixture that will provide the necessary foot candles mounted on 10 foot high poles, spaced 75 feet on center and installed 5 feet clear of the exterior perimeter fence.

4.1.5.1.3.1 Close facilities shall have perimeter lighting zone with a two foot candles level. Perimeter zone shall be defined as the area 40' inside the fence to 20' outside the fence.

4.1.5.1.3.2 Area lighting is defined as the remainder of the area within the facility from the 40 foot perimeter zone inside dimension and shall be maintained at one foot candle.

4.1.5.1.4 CCTV Systems: Closed Circuit Television cameras shall be installed to monitor both the pedestrian and vehicle sally ports. Cameras shall be monitored from the facility control room. Recording of the cameras is optional but highly recommended. Closed circuit surveillance cameras shall be positioned to monitor any area of the yard that is not directly visible from a control room. These cameras shall be monitored from facility control. Recording is optional for interior cameras.

4.1.5.1.5 Sand Trap: Outside and adjacent to the perimeter fence, a sand trap shall be constructed and maintained to provide an indication of escape path or fence tampering from out side sources. The trap shall be 15 feet in width and sloped to provide drainage without erosion of sand material. A sand trap will also be located between the two perimeter fences.

4.1.5.1.6 Perimeter Road: A paved perimeter road shall be constructed around the entire facility. The road surface shall be 12 feet wide and have shoulder widths of 6 feet. Turn around shall be provide at each turn in the road and at intervals of 400 yards.

4.1.5.1.7 Sally ports: Sally ports are designed to control movement into and out of a prison. All sally ports shall be designed with two interlocked gates. Sally port at units may be equipped with local gate control with override functions at Unit control. Facility sally ports (Stand-alone) shall be controlled only from the facility control.

4.1.5.1.7.1 Pedestrian Sally port: There shall be a single point of controlled entry into a Close Custody facility or unit. The pedestrian sally port shall be equipped with remotely controlled sliding gates. These gates shall be controlled from the facility or unit control room. The gates shall be interlocked and an interlock override shall be provided,

4.1.5.1.7.2 Vehicle Sally port: There shall be one vehicle access and pedestrian sally port per facility. The vehicle sally port shall accommodate the size of a typical fire truck serving the area. At a minimum the sally port shall be 80' long and 20' wide with concrete paving a minimum of 14'wide in line with the sliding gates. There shall be a vehicle crash bar on the yard side of the interior sally port gate. Sally port gates shall be 14' wide and 14' clear in height. There shall be an intercom station provided in the sally port for communication to the central control room.

4.1.5.2 Interior Security: A combination of systems can be utilized to create and secure functions within the perimeter of the facility. The following is the minimum requirements for systems to be utilized.

4.1.5.2.1 Fencing: Interior fencing shall be provided to defined the limits of the inmate yards and provide separation of inmate activity areas. There shall be an interior fence connecting the fronts of all buildings surrounding the yard to provide a complete barrier and define a "**No-Man's Zone**" behind the buildings. Interior fencing for Level 4 yards shall be a straight vertical 10' high fence with one coil of 30" 5 point detainer hook and barb concertina razor ribbon. No-climb (1/4" hardware cloth) shall be installed for a distance of 6' on both sides of the interior fence, where an interior fence contacts the perimeter fence. Install one section of 30" 5 point detainer hook and barb razor ribbon vertically in each corner and the fence intersection, and on the yard side where fences contact buildings.

- Outdoor visitation space shall be enclosed with a 12 foot high (minimum) fence and shall meet all the above requirements for interior fences.

4.2 BUILDING REQUIREMENTS

4.2.1 HOUSING: Close Custody inmates shall be housed in two story cell style buildings. Optimal number of beds per pod/housing unit will be based on sound correctional practice, which ensures the safety of staff and inmates as well as effective security. The housing unit shall have a control room, centrally located, capable of observing all inmate occupied areas. Buildings shall be constructed to meet an "I-3"occupancy requirement. Exit and entry doors shall be lockable with remote release capability. Building may be constructed of masonry, concrete (precast or cast-in-place) or other materials that meet the above and code requirements.

4.2.1.1 AREA REQUIREMENTS:

4.2.1.1.1 Pod Area: Housing unit pods shall be developed to house up to 50 inmates maximum. Two inmates shall be provided with a cell living space with a gross area of 80 s.f. Each cell shall contain a combination unit of lavatory/toilet. Each pod shall contain a minimum of 1750 s.f. of dayroom space for communal gathering of inmates. Each pod shall contain one one-man handicap cell.

4.2.1.1.2 Hygiene: Each dayroom shall contain showers for the use of inmates in that level of the pod. The ratio for showers is one per 8 inmates. Each cell shall contain a combination lavatory/toilet for the cells occupants. Toilet paper, toilet seat cover, and soap dispensers are not required to be installed in these hygiene areas.

4.2.1.1.3 Support Areas: Within each housing building, support area for property, equipment and cleaning supplies storage shall be provided. Storage shall be provided based on the number of inmates housed and shall be a minimum of 100 s.f. and a maximum of 300 s.f. Ceilings in support areas shall be limited to 10 feet in height or less.

4.2.1.1.4 Program Areas: Each housing building shall have area(s) dedicated for multi-purpose program functions. Space shall be provided based on 4 s.f. per inmate with a minimum room size of 250 s.f. Multi-purpose areas shall be observable from the housing control room. Program area shall be separated from

living area to provide acoustical separation.

4.2.1.1.5 Security and Control Areas: Each housing building shall be equipped with an enclosed, secure control room, positioned to allow direct vision into each pods living and hygiene area, and program area(s). The control room shall not be excessive in size, reducing the requirement to move from position to position to observe inmate areas.

- Each control room shall have an adjacent toilet room, which can be used by control staff.

- The control room in Level 4 housing units can be accessed from a secure staff corridor and requires only a single security door. No secure vestibule will be required. Each officer station shall be equipped with an escape ladder to the roof of the building, and be equipped with a means of securing the hatch from the roof side of the hatch.

4.2.1.1.6 Recreation Areas: No dedicated indoor recreation area is required within the Level 4 housing units.

4.2.1.2 FF&E/Detention Equipment/Special Systems

4.2.1.2.1 Cell and Pod Areas: Cell furniture shall be manufactured by ACI. Each cell shall contain two bunks, desks with stool, and two lockable storage cabinets. Cell doors will be constructed of 14 ga. steel with a 6"x18" view panel, contain a cuffing slot/food pass, and be operated by the control room.

- Each cell shall be equipped with two single duplex power outlets and two MATV outlets complete with cable system.

- Each pod shall be equipped with a gas drop port near the entry to the shower area. The port is utilized by officers on the roof. The port shall extend from 6" above the roof to the ceiling of the day room. No other detention equipment is required in the pod areas.

- Each pod shall be equipped with a one way paging system. An intercom station located near the pod entry doors, on both sides of the door, shall be installed so inmates and staff can communicate with control officers. Each pod shall contain one handicap accessible cell with a single bunk, handicap combo unit with grab bars, and one desk.

- Each pod shall be equipped with remote lighting control, controlled from the control room. The toilet area and dayroom space shall be controlled by different switches. Breaker shall not be utilized for switching.

- The prison shall have installed a collect only telephone system, with a mechanism to monitor and record conversations. There shall be a minimum of one phone for every 25 inmates located in a position where staff can observe phones used by inmates. Additionally there shall be sufficient jacks installed in cell blocks located strategically for use by inmates who will not have access

during recreation periods.

4.2.1.2.2 Hygiene Areas: Shower area stalls shall have remote operable doors of the same type as cell doors fabricated of stainless steel. ADA accessible showers shall be equipped with grab bars and folding seat. Wheel-in accessible showers 30" x 60" will not require a seat. Accessible showers shall be equipped with a removable, flexible and hand held shower hose and head. Combination unit lavatory/toilets within the cells shall be of stainless steel. Access panels in shower areas are stainless steel.

- **Doors, jambs and locks:** Doors and jambs shall be security type in showers, constructed with 12 gauge stainless steel face sheets with flush closed top and bottom plates. Locks, remote electrical operated from control rooms are to be of water proof design.

4.2.1.2.3 Support Areas: Storage rooms shall be equipped with high security grade commercial locks and at a minimum a solid wood door. A 5"x24" view panels shall be provided in the door to allow observation of the room by security staff.

4.2.1.2.4 Program Areas: Multi-purpose program areas shall be equipped with paging system, MATV system cable and adequate electrical outlets.

4.2.1.2.5 Security and Control Areas: Control consoles shall be installed in built-in millwork or electronic equipment enclosures. Adequate working surface space shall be provided to accommodate two officers, phone system, radios and writing materials.

- Control room shall be secured with 13/16" security glazing protected by steel bar grilles. Bar grilles shall be constructed as indicated in Appendix IV, Figure 5. Doors to the officer station shall be constructed with 12 ga. steel and be equipped with a high security commercial lock.

- Control room shall be equipped with radio, phone or site intercom systems to allow communication with facility or unit control. Installation of a 1-1/2" conduit with weather head through the roof above the officer station will be required for radio antenna.

4.2.2 FACILITY/UNIT CONTROL: Unit or Facility Control is responsible for monitoring activities of the facility (standalone) or unit (complex). In a standalone facility, this control position will also be responsible for monitoring all perimeter activities and systems. Control rooms shall be constructed to provide view of all areas controlled. Wall shall be solid grouted and reinforced with #4 bars and 8" on center both ways. Security frames shall be 12 ga. steel.

4.2.2.1 AREA REQUIREMENTS:

4.2.2.1.1 Work Areas: Unit or Facility control rooms shall be designed to allow for three staff working at one time. All support functions shall be accessible without leaving the control room. Approximate area for a central control room

shall be 225 s.f.

4.2.2.1.2 Hygiene Areas: The control room officers shall be provided with access to a wash basin and toilet. A procedure shall be established to accommodate staff use of restroom facilities, if there are no facilities directly accessible to the control center.

4.2.2.1.3 Support Areas: A secure room shall be provided for the storage and distribution of DART equipment. In a complex or stand-alone facility the room or areas shall have controlled access, electronic monitoring, and be observable from Main central control.

- Access to a control room shall be through a secure vestibule. The vestibule may serve as controlled access to other facility areas as well as the control room.

4.2.2.2 FF&E/Detention Equipment/Special Systems

4.2.2.2.1 Work Areas: The control room shall be equipped with built-in millwork to accommodate control equipment and provide adequate writing surfaces for all staff working the control room and storage of miscellaneous control equipment such as radios, chargers, phones, facility computers and procedure manuals. Space should be provided for incorporation of an under counter refrigerator, filing cabinet and a coffee maker.

Control Rooms shall have the following detention grade components:

- Security doors, frames and locks
- A secure pass drawer to the public lobby and the secure vestibule for the distribution of materials to staff and public
- A ladder and escape hatch to the roof
- A speaking device/port
- Control room windows with 2" lexan composite glazing HP White Level A.
- Bars protecting for all openings or windows (1/4" x 1" steel bars vertically positioned 5" on center per Part 7-Appendix, 7.4, Figure 5).

Special systems for the control room shall include:

- Security Control systems including door controls, intercom, camera and inmate tracking systems
- Fire alarm monitoring equipment
- Phone system
- Radio System

4.2.3 YARD CONTROL: Each facility or unit shall have a centralized control and observation post, located in approximately the center of the facility, which affords observation of all yard areas. Yard control room shall be constructed as two story structure with control position at both levels. The upper level should provide a view of building roof tops.

4.2.3.1 AREA REQUIREMENTS:

4.2.3.1.1 Control Areas: The control rooms at each level shall be 250 s.f. Each level shall be connected by a secured spiral stair.

4.2.3.1.2 Hygiene Areas: A unisex toilet facility shall be provided on the lower level of the control building.

4.2.3.1.3 Support Areas: An enclosed room with locking door shall be provided for enclosure of control equipment.

4.2.3.2 FF&E/Detention Equipment/Special Systems

4.2.3.2.1 Control Areas: Built-in millwork shall be provided for installation of control panels at both levels of the tower.

- Detention equipment shall include a pass drawer to each yard and speaking devices to each yard.

- Special systems shall include door controls, intercom, CCTV, and radio systems.

4.2.4 COMMISSARY: The commissary will provide inmates access to goods and supplies on a controlled basis. Delivery method for commissary goods is optional for Level 4 facilities. Pre-bagged and delivered to housing areas is an option to a yard based pick-up commissary. If yard pick-up is utilized, the commissary shall be placed on each yard and roll up doors shall be observable by yard control. Commissary shall have a roll up delivery door to the service yard.

4.2.4.1 AREA REQUIREMENTS:

4.2.4.1.1 Commissary Areas: There shall be a minimum of 400 s.f. (200 for commissary and 200 for storage).

4.2.4.1.2 Hygiene Areas: Staff and inmates shall use the adjacent yard toilet.

4.2.4.2 FF&E/Detention Equipment/Special Systems

4.2.4.2.1 Commissary Areas: Built-in millwork counter in commissary area for assembly of inmate orders, free standing work table and workstation furniture. Refrigerators and freezers as required.

- Detention equipment shall consist of a security roll up door and pass counter. Rooms shall be equipped with 12 gauge security doors, frame, and detention hardware.

- Doors shall be monitored remotely from yard control and unit control.

4.2.5 **WORK BASED EDUCATION**: In institutions offering work based educational training programs, classrooms are designed as multi-purpose rooms to offer academic and/or specific training programs, as well as use by various religious groups. 10' wide by 14' high roll up doors shall be included in design for the movement of raw and finished materials. Work based education areas shall be adjacent to the service yard with roll-up doors opening onto service yard. Clearances within the building shall be maintained at 14 ft. Lighting levels in the work based education training areas shall be maintained at 50 ft. candles. Natural lighting shall be provided in work shop areas.

4.2.5.1 **AREA REQUIREMENTS:** Provide a minimum of 10,000 s.f. for Work Based Educational areas and a minimum of 10,000 s.f. for ACI Industrial areas. Classrooms shall be 750s.f. and contain seating and tables for a maximum of 25 inmates.

4.2.5.1.1 **Office/Work Areas:** Staff offices shall be provided with a clear, unobstructed view of work shops.

4.2.5.1.2 **Hygiene Areas:** Separate toilet facilities shall be provided for staff and inmates.

4.2.5.1.3 **Support Areas:** A minimum of 300s.f. for storage areas shall be provided for materials and tools for each 10,000 s.f. of work based education space. Secure storage shall be provided, if necessary.

4.2.5.2 FF&E/Detention Equipment/Special Systems

4.2.5.2.1 **Office/Work Areas:** Furniture requirements shall be required by the program provided. Windows to classroom offices or work based educational areas that face onto the yard shall be protected by bar grills. Exit doors to service yards or no-man areas shall be monitored.

4.2.5.2.2 **Hygiene Areas:** Toilets for use by inmates and staff shall be provided in each work based education areas or in a common area to support classroom activities.

4.2.6 **DINING/KITCHEN:** Dining shall be provided either in dining area(s) or in housing unit dayrooms. If inmates receive food directly from a kitchen serving line, a blind serving port shall be utilized. The movement of inmates in the serving line shall be controlled by railing to reduce the problem of inmates returning for additional servings.

4.2.6.1 AREA REQUIREMENTS

4.2.6.1.1 **Dining Areas:** Dining areas shall be sized to complete feeding of all meals in one and one half hours with a maximum of four turns, and 20 minutes per turn. The minimum square footage requirement shall be calculated at 7s.f./inmate for dining room seating area.

4.2.6.1.2 **Hygiene Areas:** Staff and inmates shall use the adjacent yard toilet.

4.2.6.2 FF&E/Detention Equipment/Special Systems

4.2.6.2.1 Dining Areas: Dining tables shall be constructed of unpainted stainless steel with table and seating secured to the floor. Tables may be of 4 or 6-man configuration, Appendix IV, Figures 3 and 4. Food line shall be separated from main dining area by a ceiling height guard rail.

- Dining areas shall be equipped with a chemical agent drop port from the roof.

4.2.7 FINISH SCHEDULE

Legend: Floors

CAR ..... Carpet
CT..... Ceramic Tile
SC..... Sealed Concrete
VCT..... Vinyl Composition Tile
SC..... Sealed Concrete

Legend: Base

CT..... Ceramic Tile
VIN..... Vinyl Base

Legend: Walls

CONC..... Concrete or masonry block
GYP..... Gypsum Board
FRP..... Fiberglass Reinforced Panels
PE ..... Paint Enamel
EXP ..... Exposed

Legend: Ceiling

AP..... Acoustical Panel
EXP ..... Exposed
GYP..... Gypsum Board

AREA	FLOOR	BASE	WALLS	CEILING	HT
Facility Control					
Office	VCT OR SC	VIN	GYP/PE	AP	9'-0"
Work Areas	CAR	VIN	GYP/PE	AP	9'-0"
Toilet	CT	CT	CT	GYP	8'-0"
Support	CAR	VIN	GYP/PE	GYP	9'-0"
Commissary					
Commissary	SC		CONC/PE	EXP	9'-0"
Dining					
Dining	SC	VIN	CONC GYP/PE	EXP	12'-0"
Housing					
Pod/ Day Room	SC		GYP / RFP	AP or EXP	15'-0"
Toilets/Showers	CT	CT	CT	GYP	10'-0"
Support	SC		GYP RFP	GYP	9'-0"
Program	VCT		GYP	AP	9'-0"
Officer Station	SC	VIN	GYP/PE	AP or EXP	8'-0"
WORK BASED EDUCATION					
Office	VCT	VIN	GYP/PE	AP	9'-0"
Work Areas	SC		EXP or GYP/FRP	EXP	
Toilets	CT	CT	CT	GYP	8'-0"
Support	SC		GYP	EXP	8'-0"
Yard Control					
Control	VCT	VIN	GYP	AP	8'-0"
Toilet	CT	CT	CT	GYP	8'-0"
Support	VCT	VIN	GYP	EXP	8'-0"

Part 5 Maximum Security Facility Requirements

5.1 General Facility Requirements

5.1.1 Facility Description 2
5.1.2 Facilities Support Services (Complex Level) 2
5.1.3 Facilities Support Services (Stand Alone Facilities) 2
5.1.4 Facility Size Requirements 2
5.1.5 Physical Security 2

5.2 Building Requirements

5.2.1 Housing 5
5.2.2 Facility / Unit Control 7
5.2.3 Yard Control 8
5.2.4 Commissary 9
5.2.5 Work Based Education 9
5.2.6 Dining 9
5.2.7 Visitation 10
5.2.8 Finish Schedule 11

PART 5 MAXIMUM SECURITY FACILITY REQUIREMENTS

5.1 GENERAL FACILITY REQUIREMENTS

5.1.1 FACILITY DESCRIPTION: A Maximum Facility or unit is constructed to house inmates whose public risk is Maximum. These inmates present a high risk to the public community should escape from custody occur. The facility should be capable of restricting inmate movement within the facility and designed for 23-hour lock-down. A Maximum Security Facility could be a part of a larger complex of prison units and as such will be referred to as a Maximum Security Facility unit. Support functions vary if the prison is stand alone or part of a larger complex.

5.1.2 FACILITIES SUPPORT SERVICES (COMPLEX LEVEL): If a Maximum Facility is constructed as a part of a larger complex it will not be supported by complex medical or inmate-intake, but may share warehousing, maintenance, pharmacy, vehicle maintenance and complex administration. Perimeter patrol and monitoring of critical systems such as water supply, wastewater systems and emergency power generation, will also be provided at a complex level.

5.1.3 FACILITIES SUPPORT SERVICES (STAND ALONE FACILITIES): If a facility is stand-alone, the support functions will become a part of the facility, and must be designed and constructed in accordance with the provisions of these standards. Some services may be furnished from other ADC facilities, and if so the facility shall take into account those reduced service requirements.

5.1.4 FACILITY SIZE REQUIREMENTS: The maximum inmate population of a Maximum Security is 1,000 beds. Physical separation of inmate populations within a unit may be required depending on such circumstances as facility design, staffing patterns, and operational plan. The primary determining objective shall be the need for sound correctional practice, which ensures the safety of staff and inmates as well as effective security. Support and program functions should be designed to minimize inmate movement from yard to yard, and will require some duplication of functions. The RFP and Project Description as applicable may further define facility services and size requirements.

5.1.5 PHYSICAL SECURITY: Due to the high level of escape risk of Maximum Security inmates, the facility is designed with a high level of physical security. The facility shall be designed to withstand abuse, wear and tear, and require relatively low maintenance. Physical security shall be installed as listed in the sub-sections below.

5.1.5.1 Perimeter Security: The facilities perimeter security is made up of integrated systems and will provide a good barrier against escape. The institution's perimeter system is designed such that inmates remain within the perimeter and that access by the general public is precluded except with proper authorization. A four strand barb wire barrier fence shall serve as a delineation of prison property. The barb wire fence shall have signage every 100 feet that indicates **"No Trespassing".** The perimeter security fence shall be located a minimum of 300 feet from the prison property line.

5.1.5.1.1 Fencing: The perimeter fencing shall comply with Appendix III, Figure 3. A Level 5 Facility shall have a double perimeter fence which serves as a physical containment barrier. An additional "**No-Man's Zone**" fence shall be provided consisting of a four foot, four stand barbed wire fence denoting the interior perimeter of the "**No-Man's Zone**". Both perimeter fences shall be 14 foot high looped top fence with 6 feet of ¼" security mesh on the inside of the upper portion of the looped top. Both perimeter fences shall contain one 30" diameter 5 point detainer hook and barb concertina razor ribbon row at the top and three rows, one directly above the other starting at grade. If the perimeter fence contacts a building, a 30" diameter section of 5 point detainer hook and barb razor ribbon shall be installed vertically at the intersection, on the yard side of the fence. The fence shall have a concrete anti-dig barrier footing 6" wide by 24" deep. The bottom of the fence shall be secured by a (1-1/2" minimum) bottom rail secured to the concrete base by a anchor bolt or method approved by the Department.

All fence ties shall be equally spaced (5 per 10' section at a minimum). Fence ties shall be mechanically twisted and bolts in areas that may permit inmate access shall be tack welded (e.g., exercise, work, trash etc.). Any fenced area that serves as a temporary inmate holding area (e.g., recreation, health unit, intake, transportation, detention unit holding areas, etc.) shall use permanent straps to attach fabric to poles which shall be bolted and tack welded. This also applies to gates, which access those areas.

5.1.5.1.2 Detection Systems: Electronic detection system will be placed as indicated in Figure 3, Appendix III. The alarm system shall be broken up into zones with zone links of approximately 300 feet. An alarm condition will trigger the quarts lights associated with the alarmed zone and one lighting zone adjacent to either side of the alarmed zone. Notification of an alarm condition will be received by the unit control room

5.1.5.1.3 Perimeter and Area Lighting: Lighting on the perimeter shall be sufficient to visually detect movement. Lighting on the vehicle sally port is at least 5 foot-candles and 2-foot candles to the pedestrian sally port at the lowest level, as documented by an independent, qualified source. Foot-candles listed are minimum maintained. Light poles shall be kept a minimum of 10 feet clear from the inner-most portion of the perimeter fence. There shall be a supplemental quartz light system outside the perimeter fence consisting of 1500 watt quartz fixtures or metal halide fixtures that provide the required foot candle mounted on 10 foot high poles, spaced 75 feet on center and installed 5 feet clear of the exterior perimeter fence.

5.1.5.1.3.1 A Level 5 Facility shall have perimeter lighting zone with a three foot candles level. Perimeter zone shall be defined as the area 40' inside the fence to 20' outside the fence.

5.1.5.1.3.2 Area lighting is defined as the remainder of the area within the facility from the 40 foot perimeter zone inside dimension and shall be maintained at one foot candle.

5.1.5.1.4 CCTV Systems: Closed Circuit Television cameras shall be installed to monitor both the pedestrian and vehicle sally ports. Cameras shall be monitored from the facility control room. Recording of the cameras is optional but highly recommended. Closed circuit surveillance cameras shall be positioned to monitor any area of the yard that is not directly visible from a control room. These cameras shall be monitored from facility control. Recording is optional for interior cameras.

5.1.5.1.5 Sand Trap: Outside and adjacent to the perimeter fence, a sand trap shall be constructed and maintained to provide an indication of escape path or fence tampering from outside sources. The trap shall be 15 feet in width and sloped to provide drainage without erosion of sand material. A sand trap will also be located between the two perimeter fences.

5.1.5.1.6 Perimeter Road: A paved perimeter road shall be constructed around the entire facility. The road surface shall be 12 feet wide and have shoulder widths of 6 feet. Turn around shall be provide at each turn in the road and at intervals of 400 yards.

5.1.5.1.7 Sally ports: Sally ports are designed to control movement into and out of a prison. All sally ports shall be designed with two interlocked gates. Sally port at units may be equipped with local gate control with override functions at Unit control. Facility sally ports (Stand-alone) shall be controlled only from the facility control.

5.1.5.1.7.1 Pedestrian Sally port: There shall be a single point of controlled entry into a Maximum Security Facility or unit. The pedestrian sally port shall be equipped with remotely controlled sliding gates. These gates shall be controlled from the facility or unit control room. The gates shall be interlocked and an interlock override shall be provided.

5.1.5.1.7.2 Vehicle Sally port: There shall be one vehicle access and pedestrian sally port per facility. The vehicle sally port shall accommodate the size of a typical fire truck serving to the area. At a minimum the sally port shall be 80’ long and 20’ wide with concrete paving a minimum of 14’wide in line with the sliding gates. There shall be a vehicle crash bar on the yard side of the interior sally port gate. Sally port gates shall be 14’ wide and 14’ clear in height. There shall be an intercom station provided in the sally port for communication to the central control room.

5.1.5.2 Interior Security: A combination of systems can be utilized to create and secure functions within the perimeter of the facility. The following is the minimum requirements for systems to be utilized.

5.1.5.2.1 Fencing: Interior fencing shall be provided to define the limits of the inmate yards and provide separation of inmate activity areas. There shall be an interior fence connecting the fronts of all buildings surrounding the yard to provide a complete barrier and define a "**No-Man's Zone**" behind the buildings. Interior fencing for Maximum Facility yards shall be a straight vertical 10' high fence with one coil of 30" 5 point detainer hook and barb concertina razor ribbon. No-climb (1/4" hardware cloth) shall be installed for a distance of 6' on both sides of the interior fence, where an interior fence contacts the perimeter fence. Install one section of 30" 5 point detainer hook and barb razor ribbon vertically in each corner and the fence intersection, and on the yard side where fences contact buildings.

5.2 BUILDING REQUIREMENTS

5.2.1 HOUSING: Maximum Security inmates shall be housed in two story cell style buildings. Optimal number of beds per pod/housing unit will be based on sound correctional practice which ensures the safety of staff and inmates as well as effective security. The housing unit shall have a control room, centrally located, capable of observing all inmate occupied areas. Buildings shall be constructed to meet I-3 occupancy requirements. Exit and entry doors shall be lockable with remote release capability. Cuff and Food Slots must be provided in all cell and shower doors. Building may be constructed of masonry, concrete (pre-cast or cast-in-place) or other materials that meet the above and code requirements.

5.2.1.1 AREA REQUIREMENTS

5.2.1.1.1 Pod Area: Inmates shall be provided with a cell living space with a gross area of 80 s.f.. Each cell shall contain a combination lavatory/toilet unit. Each pod shall contain at least 1 one-man handicap cell. Each dayroom area shall have skylights to provide natural lighting for the pod. Skylights shall be configured to bring light to within 20 feet of all cell fronts. Cells shall have no windows.

5.2.1.1.2 Hygiene: Each dayroom shall contain showers for the use of inmates in that level of the pod. The ratio for showers is two per pod. Each cell shall contain a combination lavatory/toilet for the cells occupants.

5.2.1.1.3 Support Areas: Within each housing building, support area for property, equipment and cleaning supplies storage shall be provided. Storage shall be provided based on the number of inmates housed and shall be a minimum of 100 s.f. and a maximum of 300 s.f. Ceilings in support areas shall be limited to 10 feet in height or less.

5.2.1.1.4 Security and Control Areas: Each housing building shall be equipped with an enclosed, secure control room, positioned to allow direct vision into each pods living and hygiene area, and program area(s). The control room shall not be excessive in size, reducing the requirement to move from position to position to observe inmate areas.

- Each control room shall have an adjacent toilet room, which can be used by control staff.

- The control room in a Maximum Security housing unit can only be accessed from a secure staff corridor and requires only a single security door. No secure vestibule will be required. Each officer station shall be equipped with an escape ladder to the roof of the building, and be equipped with a means of securing the hatch from the roof side of the hatch.

5.2.1.1.5 Recreation Areas: Each pod shall have two fenced or walled attached outdoor recreation areas connected to the pod dayroom. The size of the exercise yards shall be 28 s.f./inmate for the number of inmates expected to use the space at any one time. Door to exercise area shall have a window for officer observation. The space may be further divided by individual exercise cubicles constructed of chain link.

5.2.1.2 FF&E/Detention Equipment/Special Systems

5.2.1.2.1 Pod Area: Cell furniture shall be manufactured by ACI. Each cell shall contain 2 bunks, and one desk with stool.

- Each pod shall be equipped with a one way paging system. An intercom station located near the pod entry doors, on both sides of the door, shall be installed so inmates and staff can communicate with control officers.

- Each pod shall be equipped with remote lighting control, controlled from the control room. The toilet area and dayroom space shall be controlled by different switches. Breaker shall not be utilized for switching. The control room shall also be equipped with lavatory and toilet flushing override capability.

- Each cell shall be equipped with two single duplex power outlets and two MATV outlets complete with cable system.

- The prison shall have installed a collect only telephone system, with a mechanism to monitor and record conversations. There shall be a minimum of one phone for every 25 inmates located in a position where staff can observe phones used by inmates. Additionally there shall be sufficient jacks installed in cell blocks located strategically for use by inmates who will not have access during recreation periods.

5.2.1.2.2 Hygiene Areas: Shower stalls shall be equipped with a stainless steel door with window for officer observation. ADA accessible showers shall be equipped with grab bars and folding seat. Wheel-in accessible showers 30" x 60" will not require a seat. Accessible showers shall be equipped with a fixed head. Combination unit lavatory/toilets within the cells shall be of stainless steel. Access panels in shower areas are stainless steel.

- **Doors, Jambs and Locks –** Doors and jambs shall be security type in showers constructed with 12 gauge stainless steel face sheets with flush closed top and bottom plates. Locks, remote electrical operated from control rooms are to be of water proof design.

5.2.1.2.3 Support Areas: Storage rooms shall be equipped with high security grade detention locks and steel doors.

5.2.1.2.4 Security and Control Areas: Control consoles shall be installed in built-in millwork or electronic equipment enclosures. Adequate working surface space shall be provided to accommodate two officers, phone system, radios and writing materials.

- Control room shall be secured with 13/16" security glazing protected by steel bar grilles. Bar grilles shall be constructed as indicated in Appendix IV, Figure 5. Doors to the officer station shall be constructed with 12 gauge steel and be equipped with a high security commercial lock.

- Officer station shall be equipped with radio, phone or site intercom systems to allow communication with facility or unit control. Installation of a 1-1/2" conduit with weather head through the roof above the officer station will be required for radio antenna.

5.2.1.2.5 Recreation Areas: Recreation areas may be constructed of two story tilt-up concrete walls with a secure, permanent steel grill over the top.

5.2.2 FACILITY/UNIT CONTROL: Unit or Facility Control is responsible for monitoring activities of the facility (standalone) or unit (complex). In a standalone facility, this control position will also be responsible for monitoring all perimeter activities and systems. Control rooms shall be constructed to provide view of all areas controlled. Wall shall be solid grouted and reinforced with #4 bars and 8" on center both ways. Security frames shall be 12 gauge steel.

5.2.2.1 AREA REQUIREMENTS:

5.2.2.1.1 Work Areas: Unit or Facility control rooms shall be designed to allow for three staff working at one time. All support functions shall be accessible without leaving the control room. Approximate area for a central control room shall be 225 s.f.

5.2.2.1.2 Hygiene Areas: The control room officers shall be provided with access to a wash basin and toilet. A procedure shall be established to accommodate staff use of restroom facilities, if there are no facilities directly accessible to the control center.

5.2.2.1.3 Support Areas: A secure room shall be provided for the storage and distribution of DART equipment. In a complex or stand-alone facility the room or areas shall have controlled access, electronic monitoring, and be observable from Main central control. Control rooms shall be through a secure vestibule. The vestibule may serve as controlled access to other facility areas as well as the control room.

5.2.2.2 FF&E/Detention Equipment/Special Systems

5.2.2.2.1 Work Areas: The control room shall be equipped with built-in millwork to accommodate control equipment and provide adequate writing surfaces for all staff working the control room and storage of miscellaneous control equipment such as radios, chargers, phones, facility computers and procedure manuals. Space should be provided for incorporation of an under counter refrigerator, filing cabinet and a coffee maker.

Control Rooms shall have the following detention grade components:

- Security doors, frames and locks
- A secure pass drawer to the public lobby and the secure vestibule for the distribution of materials to staff and public.
- A ladder an escape hatch to the roof
- A speaking device/port
- Control room windows shall be made with 2” Lexan Composite Glazing (HP White Level A).
- Bars protecting all openings or windows shall be (1/4” x 1” square tube steel vertically positioned 5” on center per Part 7-Appendix, 7.4, Figure 5).

Special systems for the control room shall include:

- Security Control systems including door controls, intercom, camera and inmate tracking systems.
- Fire alarm monitoring equipment.
- Phone system
- Radio System

5.2.3 YARD CONTROL: Maximum custody does not allow for any inmate activity in the yard area.

5.2.4 COMMISSARY: If provided the commissary will provide inmates access to goods and supplies on a controlled basis. Delivery method for commissary goods for a Maximum Facility is delivery by staff

5.2.4.1 AREA REQUIREMENTS

5.2.4.1.1 Commissary Areas: There shall be a minimum of 400 s.f. (200s.f. for commissary area and 200s.f. for a storage area).

5.2.4.1.2 Hygiene Areas: Staff and inmates shall use the adjacent yard toilet.

5.2.4.2 FF&E/Detention Equipment/Special Systems

5.2.4.2.1 Commissary Areas: Built-in millwork counter in commissary area for assembly of inmate orders, free standing work table and workstation furniture. Refrigerators and freezers as required.

5.2.5 WORK BASED EDUCATION: Maximum custody does not allow for any inmate activity in Work Based Education.

5.2.6 DINING/FOOD CART STORAGE: Most Maximum custody inmates take all meals in their cells. Should a program be instituted to allow a few inmates to eat together, a small separate dining room shall be located next to the kitchen. This dining area will be observable from a concealed, staff position outside the dining room. Visibility will be provided by a one-way window.

5.2.6.1 AREA REQUIREMENTS

5.2.6.1.1 Dining Areas: Dining areas shall be sized to accommodate the number of inmates in the rehabilitation program prescribed by the Department of Corrections and varies from facility to facility. Square footage requirement shall be calculated at 7s.f./inmate in the seating area.

5.2.6.1.2 Hygiene Areas: Staff and inmates shall use the adjacent toilet facilities.

5.2.6.2 FF&E/Detention Equipment/Special Systems

5.2.6.2.1 Dining Areas: If provided dining tables shall be constructed of unpainted stainless steel with table and seating secured to the floor. Tables may be of 4 man configuration, Appendix IV, Figure 3. Food line shall be separated from main dining area by a ceiling height guard rail.

- Dining areas shall be equipped with a chemical agent drop port from the roof.

5.2.6.2.2 Food Preparation Areas: Sufficient space shall be provided with electrical outlets, to accommodate the number of food carts needed to feed the number of inmates being housed in this unit.

5.2.7 VISITATION: Maximum Security Facilities have no contact visiting. All visiting is performed at windowed booths.

5.2.7.1 AREA REQUIREMENTS

5.2.7.1.1 Visitation Area: One visitation booth shall be provided for every 40 inmates. There shall be a manned officer station in the center of the public side of the visitation booths. Inmate side shall also contain search and staging areas.

5.2.7.1.2 Hygiene Areas: Toilets shall be provided for visitors and located in the adjacent lobby.

5.2.7.2 FF&E/Detention Equipment/Special Systems

5.2.7.2.1 Visitation Area: All visitation booths shall consist of a fixed stool for inmate and visitor and a speaking window. No phones or other appliances shall be used for communication.

5.2.8 FINISH SCHEDULE

Legend: Floors

CAR ..... Carpet
CT..... Ceramic Tile
SC..... Sealed Concrete
VCT..... Vinyl Composition Tile

Legend: Base

CT..... Ceramic Tile
VIN..... Vinyl Base

Legend: Walls

CONC..... Concrete or masonry block
GYP..... Gypsum Board
FRP..... Fiberglass Reinforced Panels
PE ..... Paint Enamel
EXP ..... Exposed

Legend: Ceiling

AP..... Acoustical Panel
EXP ..... Exposed
GYP..... Gypsum Board

AREA	FLOOR	BASE	WALLS	CEILING	HT
Facility Control					
Office	SC	VIN	GYP/PE	GYP/PE	9’-0”
Work Areas	SC	VIN	GYP/PE	GYP/PE	9’-0”
Toilet	CT	CT	CT	GYP/PE	8’-0”
Support	SC	VIN	GYP/PE	GYP/PE	8’-0”
Commissary					
Commissary	SC		CONC/PE	EXP	9’-0”
Dining					
Dining	SC	VIN	CONC/PE	EXP	12’-0”
Housing					
Pod/Day Room	SC		CONC/PE	EXP	15’-0”
Showers	CT	CT	CT	CONC	8’-0”
Support	SC		CONC	GYP	8’-0”
Control	SC	VIN	GYP/PE	GYP/PE	8’-0”
Cell	SC		CONC/PE	CONC/PE	8’-0”
Work Based Education					
Office	SC	VIN	GYP/PE	GYP/PE	9’-0”
Work Areas	SC		CONC	EXP	9’-0”
Toilets	CT	CT	CT	GYP	8’-0”
Support	SC		CONC	EXP	8’-0”

Part 6 Complex

6.1 Complex Administration 2
6.2 Complex Maintenance 4
6.3 Complex Vehicle Maintenance 4
6.4 Complex Visitor Processing 5
6.5 Complex Inmate Processing 5
6.6 Complex Medical 6
6.7 Complex Vehicle Control 8
6.8 Finish Schedule 9

PART 6 COMPLEX

6.1 COMPLEX ADMINISTRATION:

To enhance the reduction of staffing needs and the duplication of certain support functions, prison units may be grouped within one major perimeter fence if topographic conditions permit or may be placed in close proximity to one another.

Complex functions that include a Complex Warden's staff; business procurement; armory and communications; internal investigations; warehouse; security; personnel inmate records; food factory; transportation; fuel island; vehicle maintenance; building maintenance; visitation; processing; health and in-patient care; and systems for domestic water supply and distribution; WWTP processing and collection, natural gas; electrical and telephone, CCTV.

Distribution may be grouped in a manner to increase their efficiency and in manner to serve all of the prison units. Spaces to contain these functions are designed and for the most part are located outside the main perimeter security fence in a manner to serve and service the units they support.

6.1.1 AREA REQUIREMENTS

6.1.1.1 Office/Work Areas: The complex administration will contain the following areas:

- Warden or Deputy Warden Office ..... 300 s.f.
- A.D.W Office ..... 200 s.f.
- General Administrative Offices ..... 100 s.f.
- Operations Offices ..... 100 s.f.
- Reception and Administrative Support ..... 300 s.f. for open space workstation
- Accounting ..... 1200 s.f. for open space/offices
- Personnel ..... 400 s.f. offices
- Records ..... 1680 s.f. for open space/offices
- Education Offices ..... 800 s.f. for open space/offices
- Inmate Phone Monitoring ..... 200 s.f.
- Staff Training ..... 1500 s.f. classroom/ 500 s.f. offices
- Inspection & Investigation Offices ..... 1025 s.f.
- Complex Control ..... 250 s.f.
- Armory ..... 650 s.f.
- I.T. & Chaplin Offices ..... 200 s.f.

- Record storage facility shall be located outside of the secure perimeter or in a secure portion of the Administration Building. Walls and ceilings, if not constructed of masonry block, shall be reinforced with expanded metal. Rooms shall have security doors, frames and locks.

  - Inmates are generally prohibited from accessing institutional records. *ARS § 31-221*.

6.1.1.2 Hygiene Areas: The prison provides conveniently located staff facilities that are appropriately sized to meet the operational needs, including:

- Toilets and wash basins that are not used by inmates
- Female staff toilets, shower stalls, benches and 3 tier lockers proportioned according to the projected female staff complement
- Male staff toilets/urinals, shower stalls, benches and 3 tier lockers proportioned according to the projected male staff complement
- Central control shall have one dedicated unisex toilet.

6.1.1.3 Support Areas: Additional spaces shall be provided in proportion to the size of the facility and the number of staff and shall include:

- Conference Room..... 600 s.f.
- Video / Office..... 160 s.f.
- Copier Room ..... 125 s.f.
- Public Lobby ..... 225 s.f.
- Storage..... As required

6.1.2 FF&E/Detention Equipment/Special Systems

6.1.2.1 Office/Work Areas: Furniture shall be purchased from ACI and consist of modular furniture systems.

- A weapons storage locker shall be provided near the control room on the exterior of the building. There shall be a minimum of one locker for every ten employees. Administrative offices shall be protected by security barred windows and appropriate fencing. Access doors to staff support areas shall be mechanically/electrically controlled from the central control room and openings shall be provided with intercom stations on each side of the doors.

- Special systems for the administrative area shall consist of video monitoring equipment and inmate telephone system monitoring station.

6.1.2.2 Hygiene Areas: The following items shall be provided at a facility administration building:

- Central control shall have one dedicated unisex toilet.

6.1.2.3 Support Areas: The reception area shall be equipped with built-in millwork counter for visitor processing. The counter shall be designed to ADA accessibility requirements.

- A metal detector shall be furnished in the lobby area for screening of visitors and staff. The metal detector shall enunciate in the control room.

6.2 COMPLEX MAINTENANCE

6.2.1 AREA REQUIREMENTS

6.2.1.1 Office/Work Areas: Maintenance area shall include a staff office (200 s.f.) with a staff toilet, secure tool storage, inmate toilet, general storage space and work areas. The size of maintenance shall be determined by the size (number of inmates) of the facility and shall be calculated on 9 s.f./inmate. Various areas shall consist of:

Reception Desk	Staff Offices	Conference Room
Locksmith Shop	Tool Crib	Secure Storage
Carpentry Shop	Plumbing Shop	Electrical Shop
Welding Shop	HVAC Shop	Paint Storage
Indoor General Storage	Outdoor General Storage	Outdoor Work Area

6.2.1.2 Hygiene Areas: Separate toilets shall be provided for inmates and staff.

6.2.2 FF&E/Detention Equipment/Special Systems

6.2.2.1 Office/Work Areas: Local area network cabling system shall be provided.

6.3 COMPLEX VEHICLE MAINTENANCE:

Vehicle maintenance is one of the services that are often contracted out. If the facility size or location warrants a vehicle maintenance facility, the number of vehicle repair bays will be determined by ADC on a project by project basis.

6.3.1 AREA REQUIREMENTS

6.3.1.1 Office/Work Areas: The main vehicle maintenance building, if required, shall contain the appropriate number of vehicle maintenance bays, supply and secure storage, tool room, auto technician office and exterior lube and wash bays.

6.3.1.2 Hygiene Areas: Separate toilet facilities shall be provided for staff and inmates.

6.3.1.3 Support Areas: Vehicle maintenance shall also contain the facility fire safety staff. This area shall consist of fire truck(s) storage, transportation office, fire safety office and break room for fire crew.

6.3.2 FF&E/Detention Equipment/Special Systems: Vehicle maintenance shall consist of the following Standard equipment:

Compressed Air (tanks and racks)	One Vehicle Lift per Bay	One Work Bench per Bay
Drill Press	Tire Balancer	Tire Changer
Alignment Machine	Brake Lathe	

6.3.2.1 Office / Work Areas: Break room shall contain built-in millwork.

6.3.2.2 Hygiene Areas: In addition to separate toilet facilities for staff and inmates, a first aid eye wash area shall be included in the general vehicle maintenance area.

6.3.2.3 Support Areas: Fire safety shall contain auxiliary equipment to support the individual type of vehicles to be stored (rescue, ladder truck, hose truck, etc.).

6.4 COMPLEX VISITOR PROCESSING

6.4.1 AREA REQUIREMENTS: Complex visitor processing shall serve three functions: To process visitors, to process staff, and to provide a clothing changing area for staff.

6.4.1.1 Office/Work Areas: The following spaces shall be designed into this area:

- Control (identification check and package check)
- Secure Storage
- Staff Office (used as office and search room)
- Staff Physical Training Room

6.4.1.2 Hygiene: Public toilets (men and women) and staff locker rooms (men and women)

6.4.2 FF&E/Detention Equipment/Special Systems

6.4.2.1 Office/Work Areas: Turnstiles shall separate both visitors and staff from the transportation pick up area. Turnstiles shall operate in one direction only – allowing egress onto the complex perimeter road and egress back into visitor processing. Staff and visitor areas shall be divided by chain link fencing. Metal detectors shall be located at the first turnstiles for egress to the complex perimeter road on both staff and visitor sides of the building.

6.5 <u>COMPLEX INMATE PROCESSING</u>

6.5.1 AREA REQUIREMENTS

6.5.1.1 Office/Work Areas: The inmate processing area shall consist of the following spaces:

- Property Search
- Property Storage
- Holding Cells (inside and outside)
- Vehicle sally port

6.5.1.2 Hygiene: Separate unisex staff toilet shall be located adjacent to property search area and an inmate toilet will be located in the inmate processing room.

6.5.2 FF&E/Detention Equipment / Special Systems

6.5.2.1 Office/Work Areas: The property search room shall be designed for package x-ray machine, while the property storage area shall contain racks for inmate personal property storage. Exterior holding pens (chain link enclosures) shall be located adjacent to the vehicle sally port for immediate detention of inmates upon debarking transport vehicle. 80 s.f. interior holding cells shall be dry and accommodate one man each.

6.5.2.2 Hygiene: A single occupancy, inmate toilet (handicap accessible) shall be located adjacent to the interior holding cells.

6.6 COMPLEX MEDICAL

6.6.1 AREA REQUIREMENTS:

6.6.1.1 Office/Work Areas: The square footage for the medical facility shall be sized appropriately consistent or at minimum based on 6 s.f. per inmate in the Complex Medical Building and Nurse Call Area and with the activities of the unit and availability of out-sourced services. Within that area, the following spaces shall include:

Interior Inmate holding cells
Exterior Inmate holding cells
Secure Medication Storage
Pharmacy
Medical Records
Exam rooms
Emergency Treatment Room
Nurse Station
Medical Record Storage
Medication Room
Clean/Soiled Linen
Telemedia Exam Room
Library (Medical)
Blood Lab
Staff Offices
Staff Toilet/Locker rooms
Conference room
Staff Break room

- In stand alone facilities, the medical facilities may include medical ward beds, single bed medical rooms and isolation rooms. Areas for visitation and fenced exercise shall provide segregation of inmates by classification and shall be covered by video monitoring.

- Dental operatories shall be designed with a minimum of 2 chairs. Required areas are: operatories, lab, offices, x-ray, panorex, secure medication storage and equipment storage.

6.6.1.2 Hygiene Areas: Separate toilet facilities will be designed for inmates and

staff. The ratio of handicap accessible toilets shall be governed by ADA Standards.

6.6.1.3 Support Areas: Medical shall contain storage for records, offices and break room for staff, laundry facilities for linens, holding cells for inmates, and secure medication storage.

6.6.2 FF&E/Detention Equipment/Special Systems

6.6.2.1 Office/Work Areas: Institutions with temporary medical storage areas, shall locate such facilities outside of the secure perimeter or in a secure portion of the Administration Building. Rooms shall have security doors, frames and locks. All sinks shall have plaster traps. A dispensary may be located within the secure perimeter for the purpose of dispensing of medication. The dispensary shall have:

- A secure pass through for the distribution of medical supplies to staff and inmates
- A speaking device/port
- Security doors, frames and locks

Nurse Station shall have the following detention grade components:

- Security doors, frames and locks

Special systems for the medical shall include:

- Security Control systems including door controls (from waiting area to internal corridors), intercom, and camera systems.
- Fire alarm monitoring equipment.
- Phone system
- Radio System
- Dedicated telecommunication cables for Telemedia communications
- Nurse call system

Emergency shut-off systems shall be provided for all dental equipment.

Dental lab shall be furnished with built-in millwork counters and cabinets. All equipment for lab, x-ray and operatories shall be provided by ADC. All sinks to be provided with plaster traps.

6.6.2.2 Support Areas: Staff offices and support areas shall be separated from inmate occupied areas by secure corridors. Secure medication storage shall consist of masonry block wall construction with steel security door, frame and lock.

6.7 COMPLEX VEHICLE CONTROL: The main entry roadway to the Complex is to be designed to funnel all vehicle and pedestrian traffic through one Security Check Point, which becomes a portion of the four strand barbed wire barrier fence that delineates the prison boundary. The Complex Vehicle Control Building is a concrete block structure approximately 10' wide and 16' long, that is protected by a multitude of 8" concrete filled pipe columns 4'0" O.C. around entire building exterior, 4'0" above grade. The building is air conditioned and heated by a heat pump, has window visibility on all three sides facing in coming traffic, has a minimal sized toilet room facing exiting traffic, with a control facing in coming traffic and doors on both sides. Drinking fountain, colored concrete floor, rubber base and 2" insulated walls faced with drywall finishes the inside.

The design is to include double vehicle on the entry and exit with manually operated lift arms. The second lane is to be used for emergency vehicles. A 10 car parking area is to be provided outside the barbed wire fence to be used a holding area for visitors that need to be escorted.

6.8 FINISH SCHEDULE

Legend: Floors

CAR ..... Carpet
CT..... Ceramic Tile
SC..... Sealed Concrete
VCT..... Vinyl Composition Tile

Legend: Base

CT..... Ceramic Tile
VIN..... Vinyl Base

Legend: Walls

CL..... Chain Link Fence
CONC..... Concrete or masonry block
GYP..... Gypsum Board
FRP..... Fiberglass Reinforced Panels
PE ..... Paint Enamel

Legend: Ceiling

AP..... Acoustical Panel
EXP ..... Exposed
GYP..... Gypsum Board
SHC..... Shade Cloth
GYP/SM..... Gypsum Board and Security Mesh

AREA	FLOOR	BASE	WALLS	CEILING	HT
Administration					
Office	CAR	VIN	GYP/PE	AP	9'-0"
Open Work Areas	CAR	VIN	GYP/PE	AP	9'-0"
Toilet	CT	CT	CT	AP	9'-0"
Support	CAR or VCT	VIN	GYP/PE	AP	9'-0"
Maintenance					
Office	SC	VIN	CONC/PE OR GYP/PE	AP	9'-0"
Work Areas	SC	-	CONC or GYP/PE	EXP	
Toilets	CT	CT	CT	AP	9'-0"
Vehicle Maintenance					
Office	SC	VIN	CONC/PE or GYP/PE	AP	9'-0"
Work Areas	SC		CONC	EXP	-
Toilets	CT	CT	CT	AP	8'-0"
Support	SC	-	CONC	EXP	-
Visitor Processing					
Office / Control	SC	VIN	GYP/PE	AP	8'-0"
Public Toilets	CT	CT	CT	AP	8'-0"
Staff Locker rooms	SC	VIN	GYP/PE	AP	8'-0"
Staff Toilets	CT	CT	CT	AP	8'-0"
Inmate Processing					
Office	SC	VIN	GYP/PE	AP	8'-0"
Exterior Holding	SC	-	CL	SHC	12'-0"
Interior Holding	SC	-	CONC	CONC	12'-0"
Toilet	CT	CT	CT	AP	8'-0"
Support	SC	-	CONC or GYP/PE	EXP OR GYP/PE	8'-0"
Medical					
Office	CAR	VIN	GYP/PE	AP	9'-0"
Work Areas	VCT	VIN	GYP/PE	AP	9'-0"
Toilets	CT	CT	CT	AP	8'-0"
Support	SC		CONC or GYP/PE	EXP	9'-0"
Inmate Holding (Interior)	SC		CONC or GYP/PE	EXP	
Medication Storage	VCT	VIN	CONC or GYP/PE	GYP/SM	
Inmate Holding (Exterior)	SC		CL	SHC	12'-0"
Nurse Call Area	SC	VIN	GYP/PE	AP	9’0”

Part 7 - Appendix

7.1 Appendix I - Regulatory Codes
7.1.1 Federal, Statutory and Regulatory 2
7.1.2 Building Fire Code and Safety 3
7.1.3 Uniform Fire Code - 1988 Ed. 3
7.3 Appendix III - Fences
Fig 1 - Perimeter Fence - Minimum Facilities 1
Fig 2 - Perimeter Fence - Medium Facility 2
Fig 3 - Perimeter Fence – Close and Maximum Facilities 3
Fig 4 – Vehicle Sally Port Control Building 4
7.4 Appendix IV - Furniture
Fig. 1 ACI Bunk Bed / Desk / Storage – Minimum and Medium Custody 1
Fig. 2 Inmate Stool – For Minimum and Medium Custody 2
Fig. 3 4-Man Dining Table 3
Fig. 4 6-Man Dining Table 4
Fig. 5 Housing Control Room Window Bar Grilles 5
Fig. 6 Typical Cell Plan (Close and Maximum Custody) 6
Fig. 7 Typical Cell Elevation (Close and Maximum Custody) 7
7.5 Appendix V - Par Course Requirements
Station #1 3 Stage Pull-up Bar 1
Station #3 Female Parallel Dip Bar 2
Station #4 Pull-up Bar 3
Station #5 Elevated Push-up Bar 4
Station #6 Male Parallel Dip Bar 5
Station #7 Back & ABS Station 6
Station #8 Triceps Dip Station 7
Station #9 Hand Walk Station 8
Station #10 Calf Raise Station 9
Station #11 Stair Climb 10
Station #12 Sit-up Station 11
7.6 Appendix VI - Finish Schedules
Finish Schedule Legend 1
Finish Schedule Chart 2

PART 7 - APPENDIX

7.1 APPENDIX I - REGULATORY CODES

7.1.1 Federal, Statutory and Regulatory

- Arizona Revised Statute, Title 34, et al, Public Buildings and Improvements.
- *A.R.S 34-451 Energy conservation standards for public buildings*
- *A.R.S. 34-452, Solar design standards for state buildings; energy life cycle costing.*
- *A.R.S. 34-461, Applicability of local codes, exceptions, definition.*
- A.R.S. 36-136, Powers *and duties of Director; compensation of personnel*. (Department of Health Services)
- A.R.S. 37-321, *Permission required for person other than holder of certificate of purchase to make improvements; forfeiture for failure to obtain permission; report of improvements.*
- A.R.S. 40-441, Commission *safety regulations, rules and orders; definitions. (Pipeline Safety)*
- A.R.S. 41-511.04, *Duties; board; partnership fund; state historic preservation officer*. (State Board of Historic Preservation)
- A.R.S. 41-790, et al, Management of State Properties.
- A.R.S. 41- 844, Duty to report discoveries; disposition of discoveries, definitions. (Archeological Discoveries)
- A.R.S. 41-861, Agency responsibilities. (Historic Preservation)
- A.R.S. 41-1492 et seq, Public Accommodation and Services.
- A.R.S. 41-2151, *et al, Office of Manufactured Housing; purpose*.
- A.R.S. 41-2161, et al, Office of State Fire Marshal.
- *A.R.S. 41-2163, Powers and duties, arson investigators.*
- A.R.S. 45-101, et al, Department of Water Resources.
- A.R.S. 49-104, Powers *and duties of the department and director. (Arizona Department of Environmental Quality)*
- Executive Order 2005-5, Implementing Renewable Energy and Energy Efficiency in New State Buildings
- Executive Order 2004-28, Statewide 5% Water Use Reduction
- Executive Order 2003-14, Implementing Statewide Efficiency Review
- A.A.C. R18-2-1101; Federal Hazardous Air Pollutants
- 40 CFR Part 61, National Emission Standards for Hazardous Air Pollutants; Asbestos
- NESHAP Revision; Final Rule.
- Appendix A, Subpart F, 40 CFR Part 763, Section 1, Polarized Light Microscopy (PLM)
- Americans with Disabilities Act of 1990, Titles I-V.

7.1.2 Building Fire Code and Safety

- International Fire Code Standards—2003 Edition
- International Building Code—2006 Edition
- International Mechanical Code—2006 Edition
- Uniform Plumbing Code—1994 Edition with Local Amendments
- Occupational, Safety and Health Administration Standards.
- American Society of Heating, Refrigerating and Air-Conditioning Engineers, Inc., (ASHRAE) Design reviews will conform to local City and County Codes of Jurisdiction.

7.1.3 International Fire Code—2003 Edition

- NFPA#10 Portable Fire Extinguishers—2002 Edition
- NFPA# 12A Halon 1301Fire Extinguishing System—2004 Edition
- NFPA# 12B Halon 1211 Fire Extinguishing Systems—2004 Edition
- NFPA# 13 Installation of Sprinkler Systems—2002 Edition.
- NFPA# 13 Inspection, Testing and Maintenance of Sprinkler Systems—2002 Edition
- NFPA#13R Installation of Sprinkler System in Residential Occupancies up to Four Stories Height—2002 Edition.
- NFPA# 14 Standpipe & Hose Systems—2003 Edition
- NFPA# 15 Water Spray Fixed Systems—2001 Edition
- NFPA# 16 Foam Water Spray Systems—2003 Edition
- NFPA# 17 Dry Chemical Extinguishing Systems—2002 Edition
- NFPA# 17A Wet Chemical Extinguishing Systems—2002 Edition
- NFPA# 20 Centrifugal Fire Pumps—2003 Edition
- NFPA# 22 Water Tanks For Private Fire Protection—2003 Edition
- NFPA# 24 Private Fire Service Mains—2002 Edition
- NFPA# 51 Cutting & Welding Processes—2002 Edition
- NFPA# 58 Liquefied Petroleum Gases—2004 Edition
- NFPA# 70 National Electrical Code—2005 Edition
- NFPA# 72B Auxiliary Protective Signaling Systems—2002 Edition
- NFPA# 72C Remote Station Protective Signaling Systems—2002 Edition
- NFPA# 72D Proprietary Protective Signaling Systems—2002 Edition
- NFPA# 72E Automatic Fire Detectors—2002 Edition
- NFPA# 72H Testing Procedures for Local, Auxiliary, Remote Station and Proprietary Protective Signaling Systems—2002 Edition
- NFPA# 80 Fire Doors and Windows—99 Edition
- NFPA# 86 Ovens and Furnaces, Design, Location, and Equipment—2003 Edition
- NFPA#110 Emergency Power—2002 Edition
- NFPA# 230 General Storage—2003 Edition
- NFPA# 303 Fire Protection Standard for Malians and Boatyards—2000 Edition
- NFPA# 407 Aircraft Fuel Service—2001 Edition.
- NFPA# 409 Aircraft Hangars—2001 Edition
- NFPA# 490 Ammonium Nitrate, Storage of —2002 Edition
- NFPA# 498 Explosive Motor Vehicle Terminals—2001 Edition
- NFPA# 651 Aluminum and Magnesium Powder—2002 Edition
- NFPA# 704 Identification of the Fire Hazards of Materials—2001 Edition
- State Fire Marshal Approved Modifications—2003 Edition

7.3 Appendix III Fences

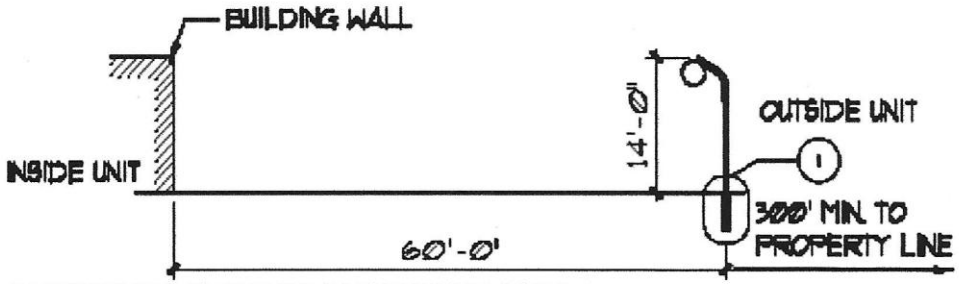

CURRENT MINIMUM CUSTODY LEVEL
PERIMETER SECURITY FENCE

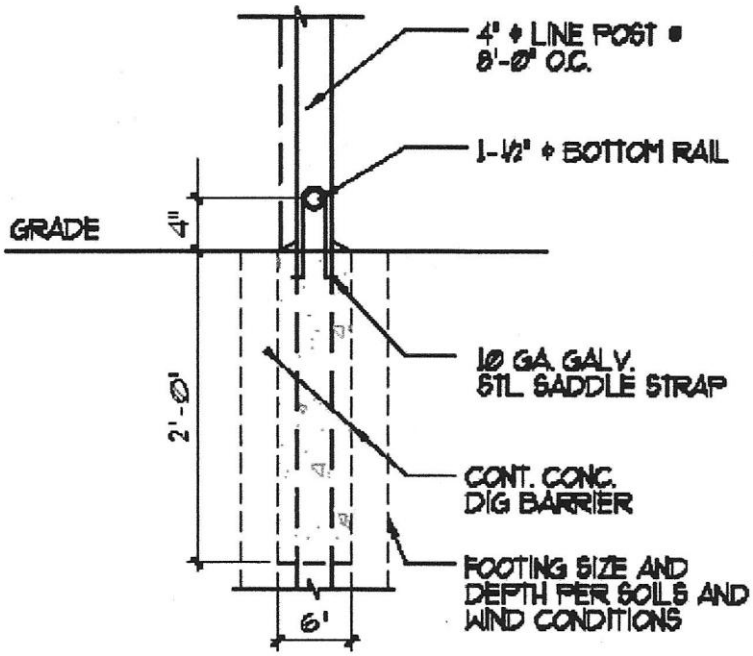

(1) **TYPICAL FENCE POST @ DIG BARRIER**

PERIMETER FENCE
MINIMUM CUSTODY LEVEL

PRISON PHYSICAL PLANT
STANDARDS MANUAL

FIG. 1

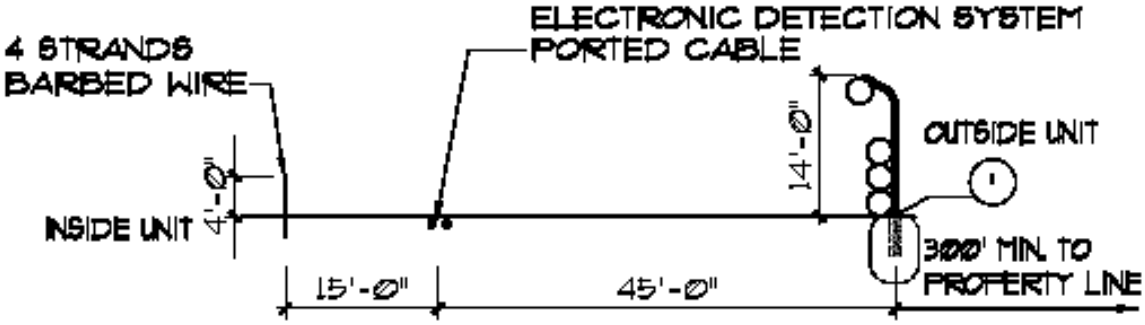

CURRENT MEDIUM CUSTODY PERIMETER SECURITY FENCE

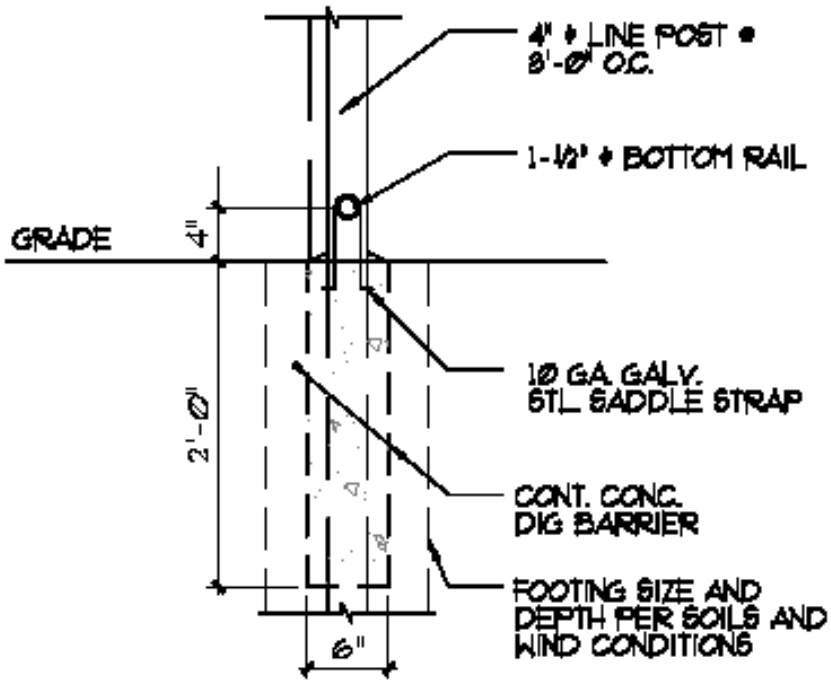

1 TYPICAL FENCE POST @ DIG BARRIER

PERIMETER FENCE - MEDIUM CUSTODY FACILITY

PRISON PHYSICAL PLANT
STANDARDS MANUAL

FIG. 2

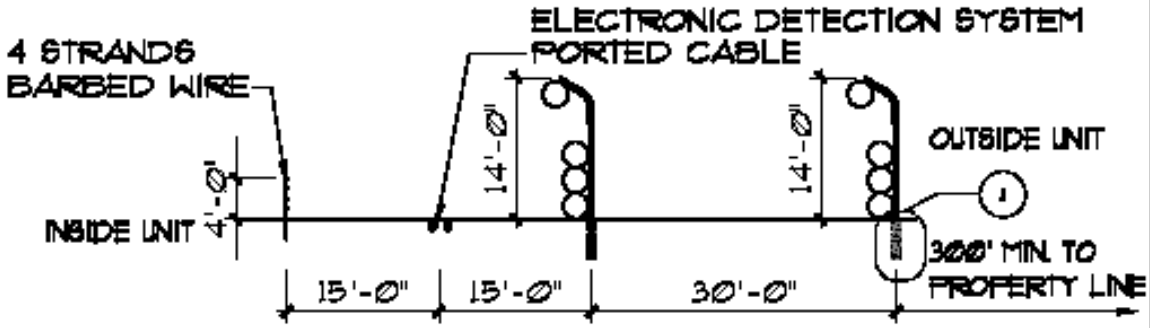

CURRENT CLOSE & MAXIMUM CUSTODY PERIMETER SECURITY FENCE

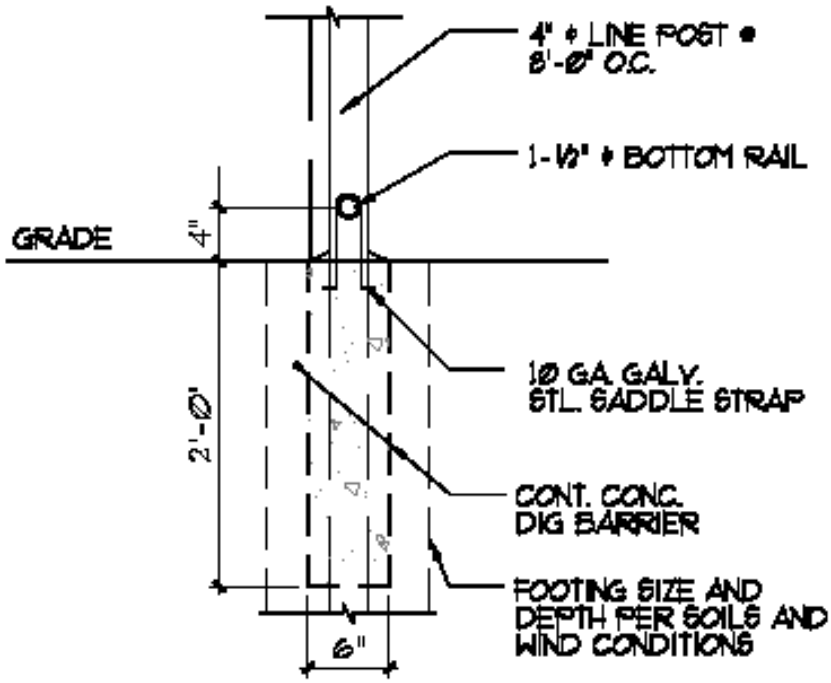

(1) TYPICAL FENCE POST @ DIG BARRIER

PERIMETER FENCE
CLOSE & MAXIMUM CUSTODY FACILITY

PRISON PHYSICAL PLANT
STANDARDS MANUAL

FIG. 3

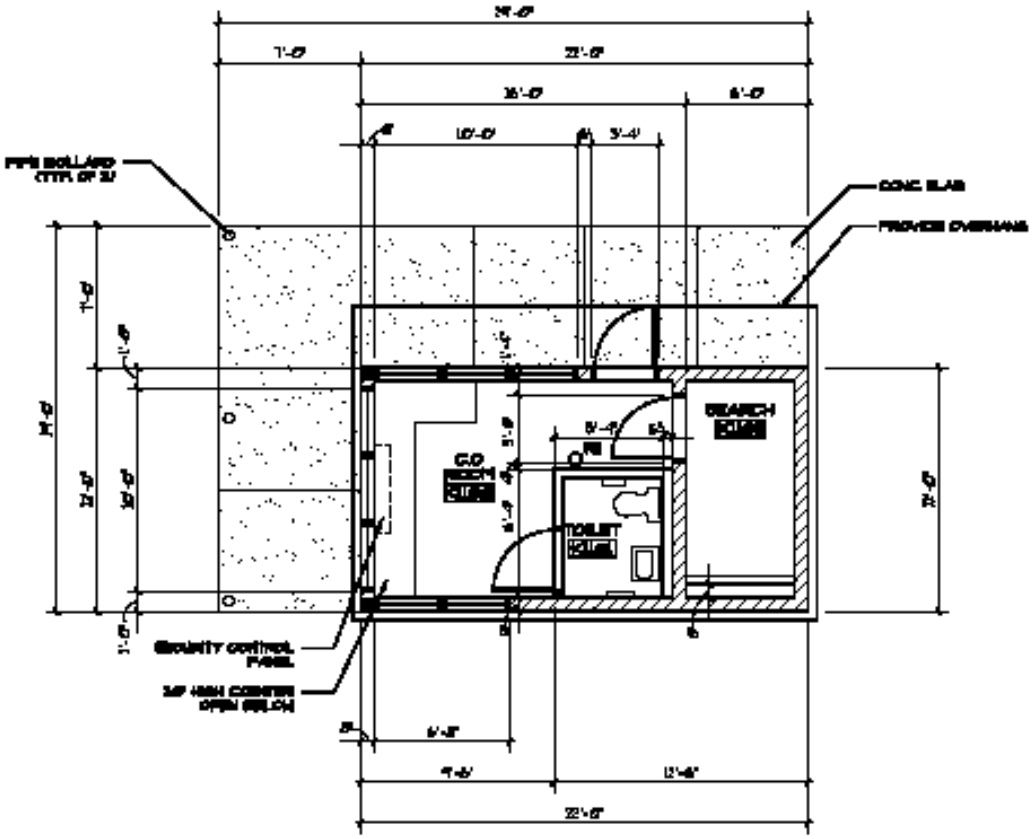

1 TYPICAL SECURITY OFFICE

VEHICLE SALLY PORT CONTROL BUILDING

PRISON PHYSICAL PLANT STANDARDS MANUAL

FIG. 4

7.4 APPENDIX IV-Furniture

7.4.1 Figure 1 ACI Bed/Desk/Storage

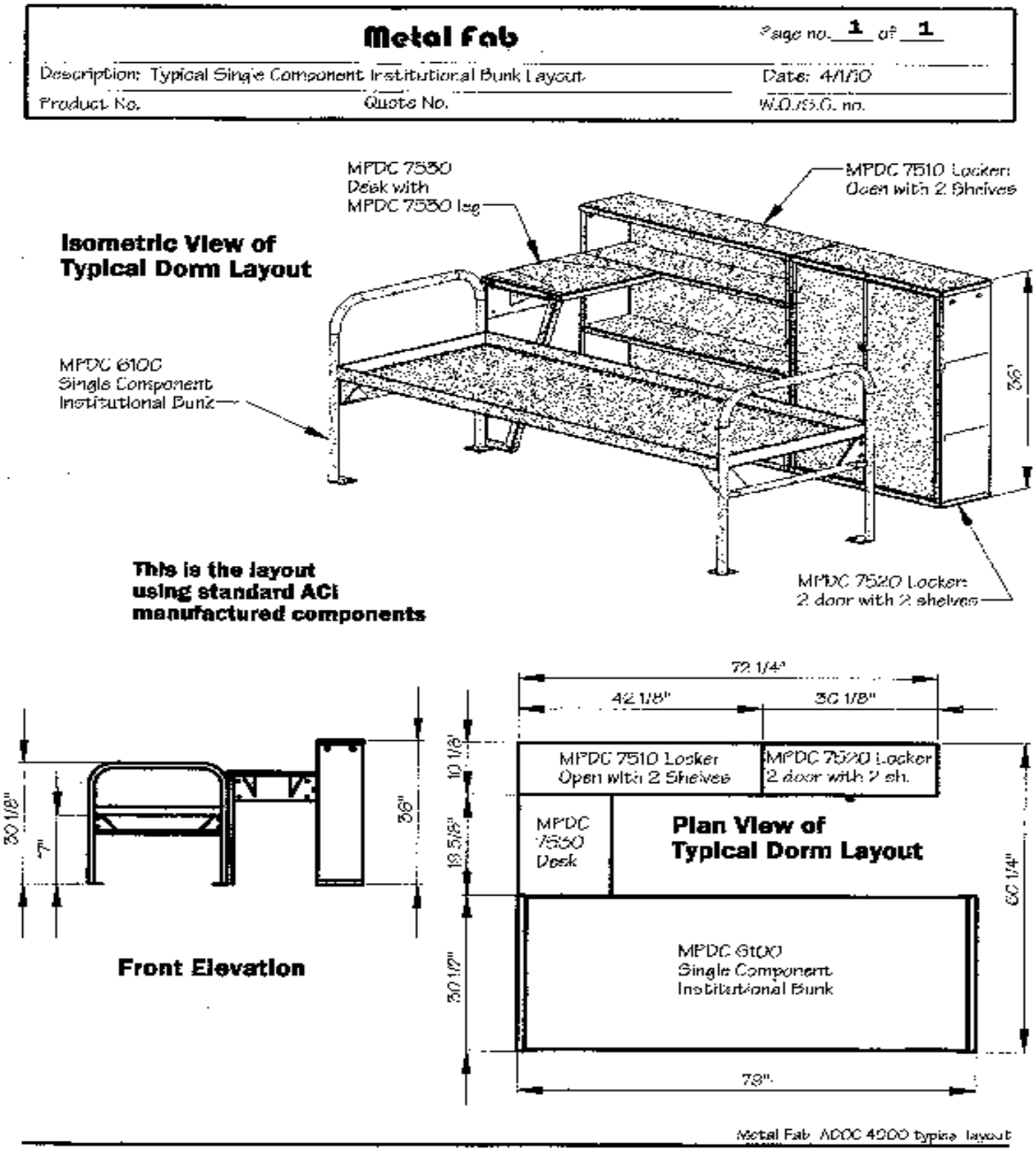

7.4.2 FIGURE 2 INMATE STOOL

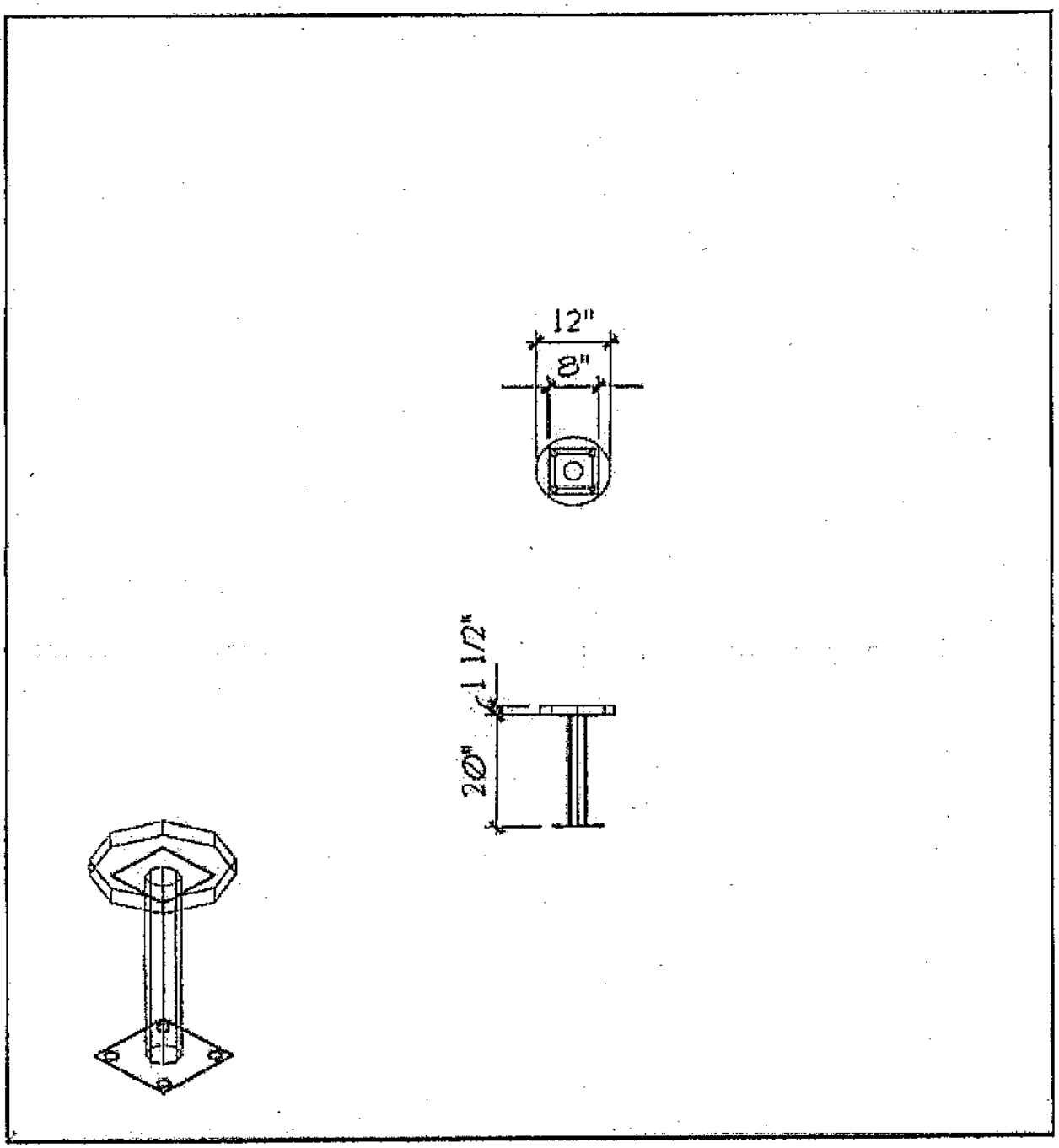

INMATE STOOL

PRISON PHYSICAL PLANT STANDARDS MANUAL

FIG. 2

7.4.3 FIGURE 3 4 MAN DINING TABLE

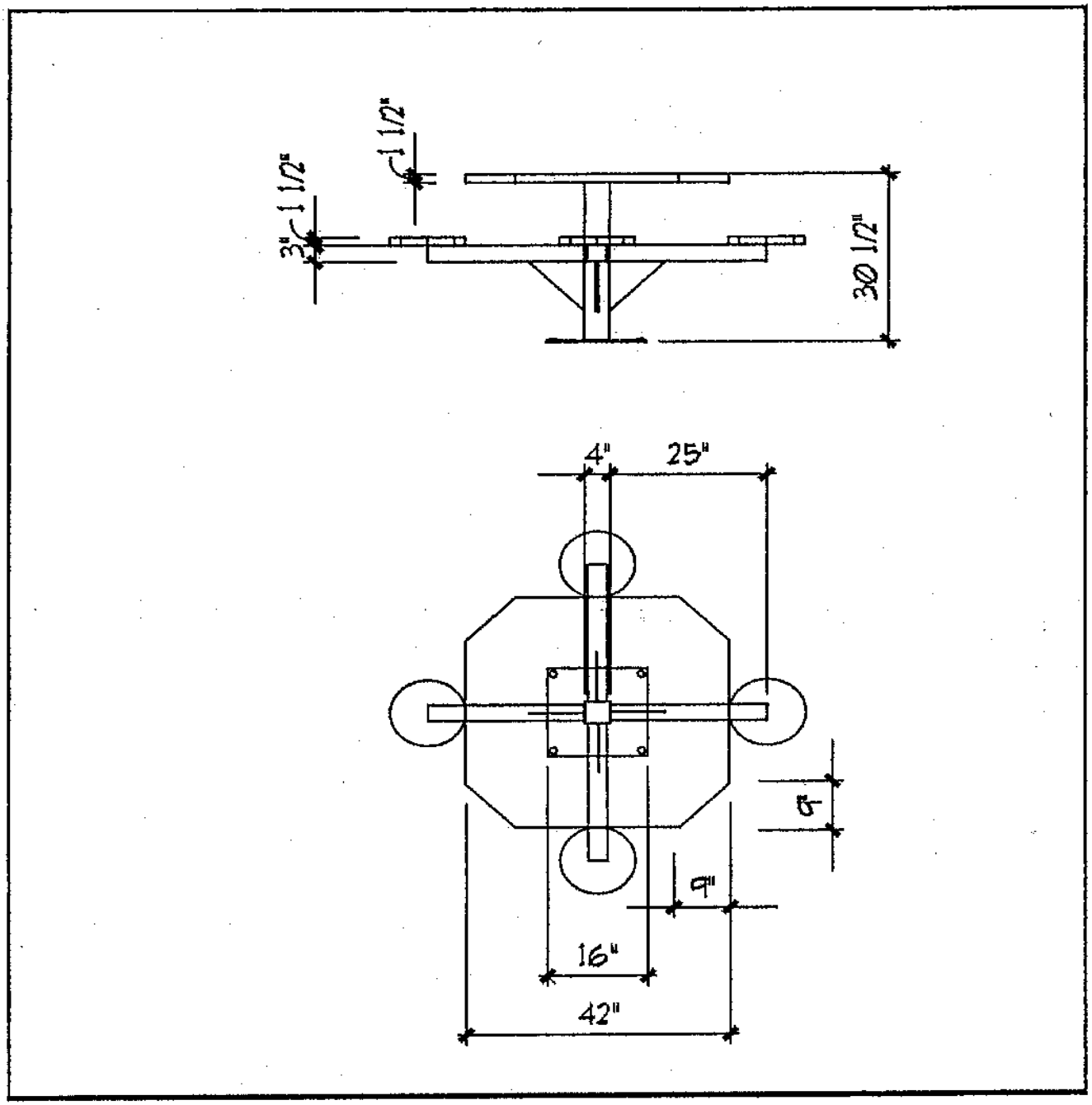

4-MAN DINING TABLE

PRISON PHYSICAL PLANT STANDARDS MANUAL

FIG. 3

7.4.4 FIGURE 4 6 MAN DINING TABLE

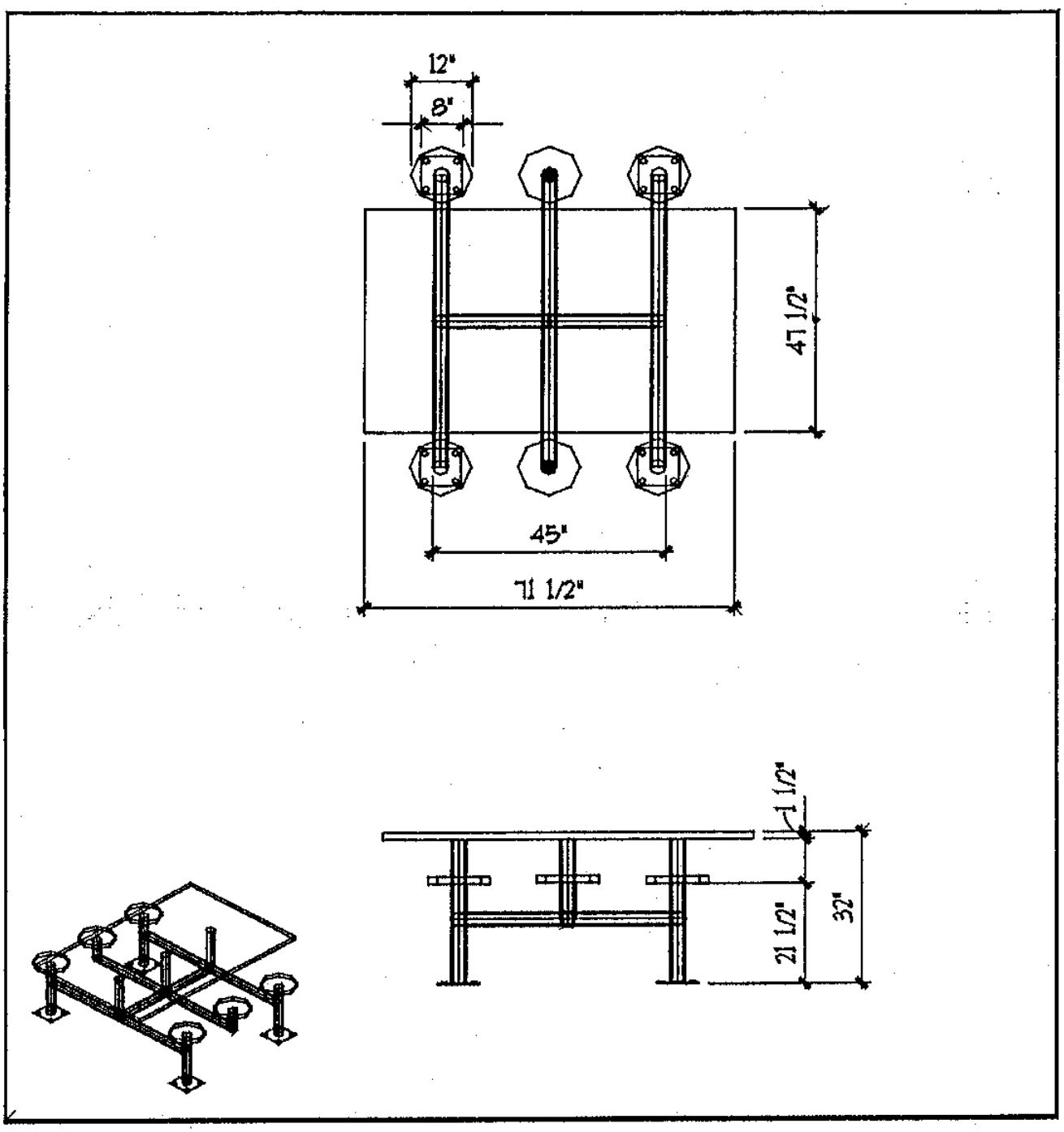

6-MAN DINING TABLE

PRISON PHYSICAL PLANT STANDARDS MANUAL

FIG. 4

7.4.5 FIGURE 5 HOUSING CONTROL ROOM WINDOW BAR GRILLS

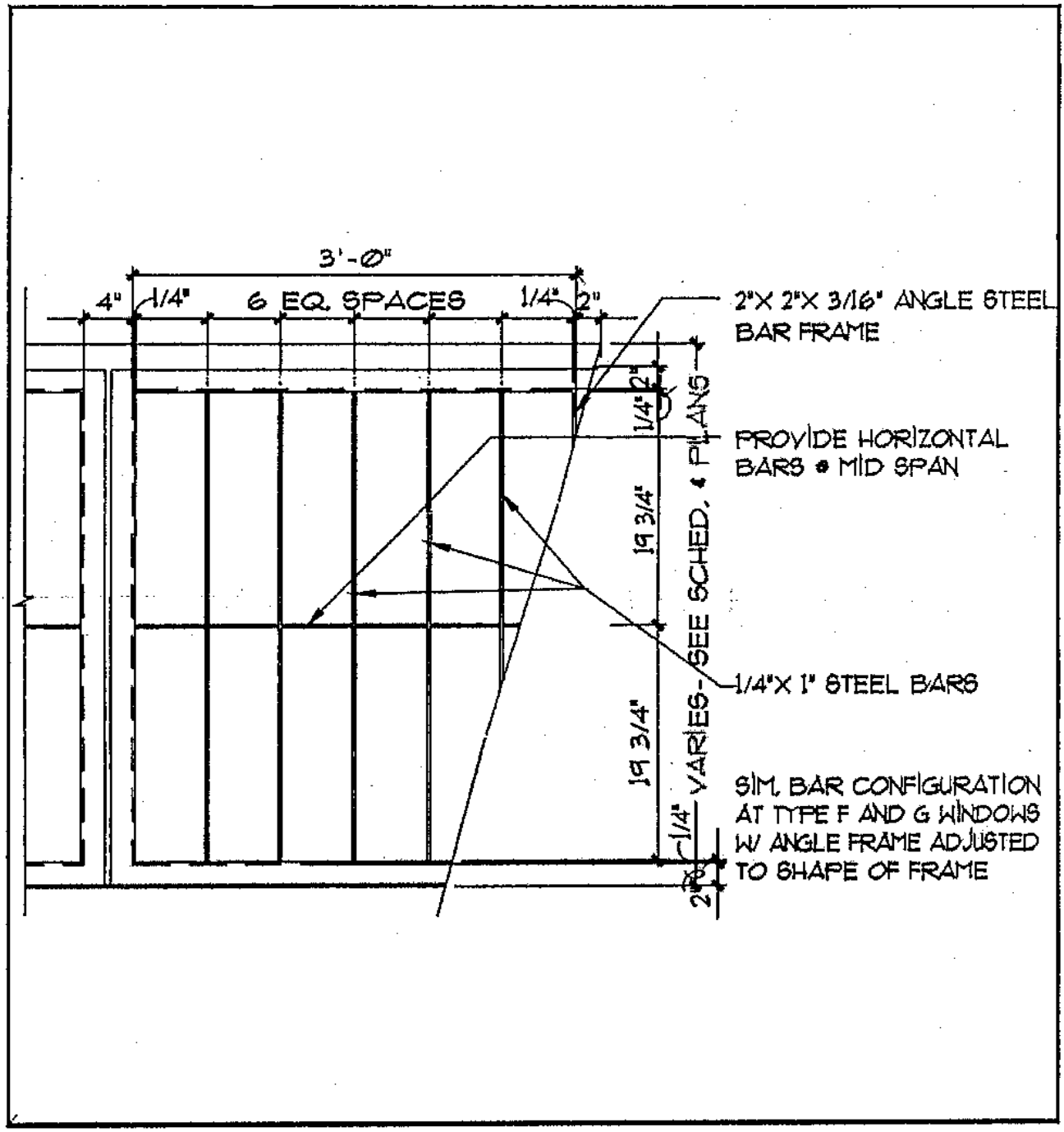

HOUSING CONTROL ROOM WINDOW BAR GRILLS

PRISON PHYSICAL PLANT STANDARDS MANUAL

FIG. 5

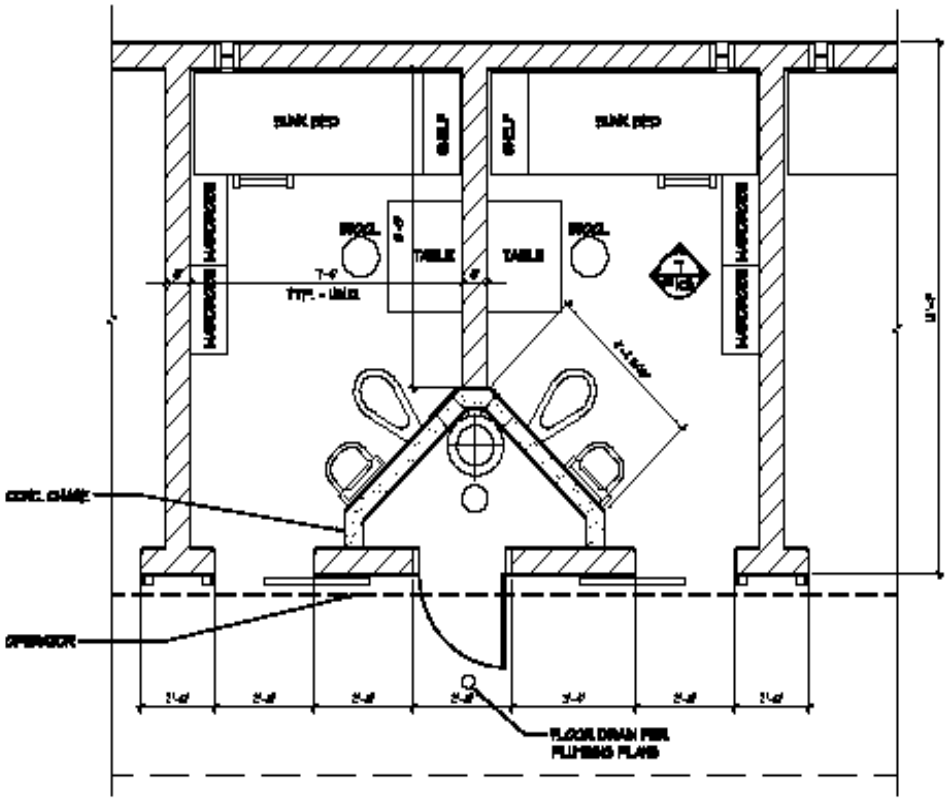

TYPICAL CELL PLAN

PRISON PHYSICAL PLANT
STANDARDS MANUAL

FIG. 6

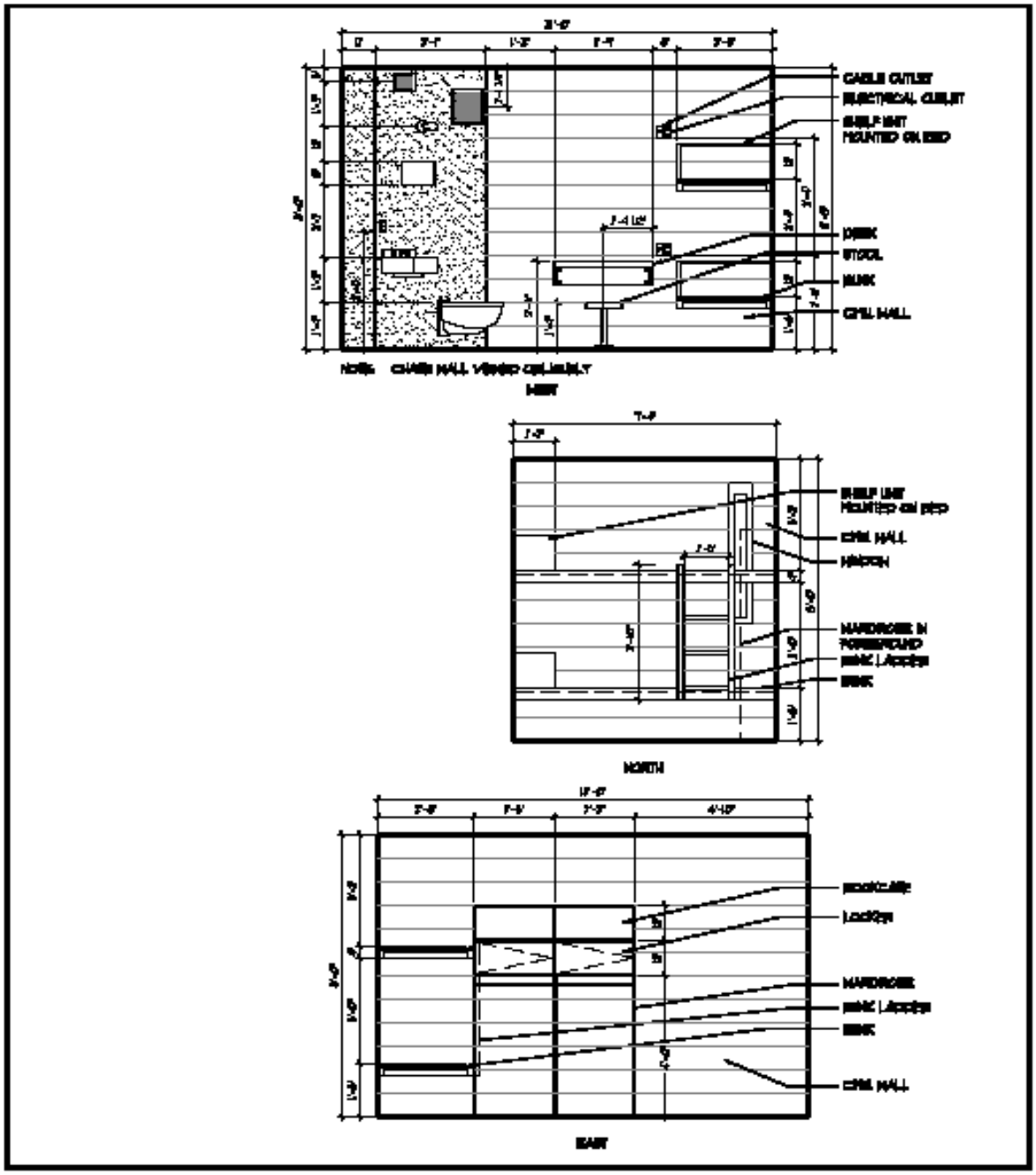

TYPICAL CELL ELEVATION

PRISON PHYSICAL PLANT STANDARDS MANUAL

FIG. 7

7.5 Appendix V Par Course Design Requirements

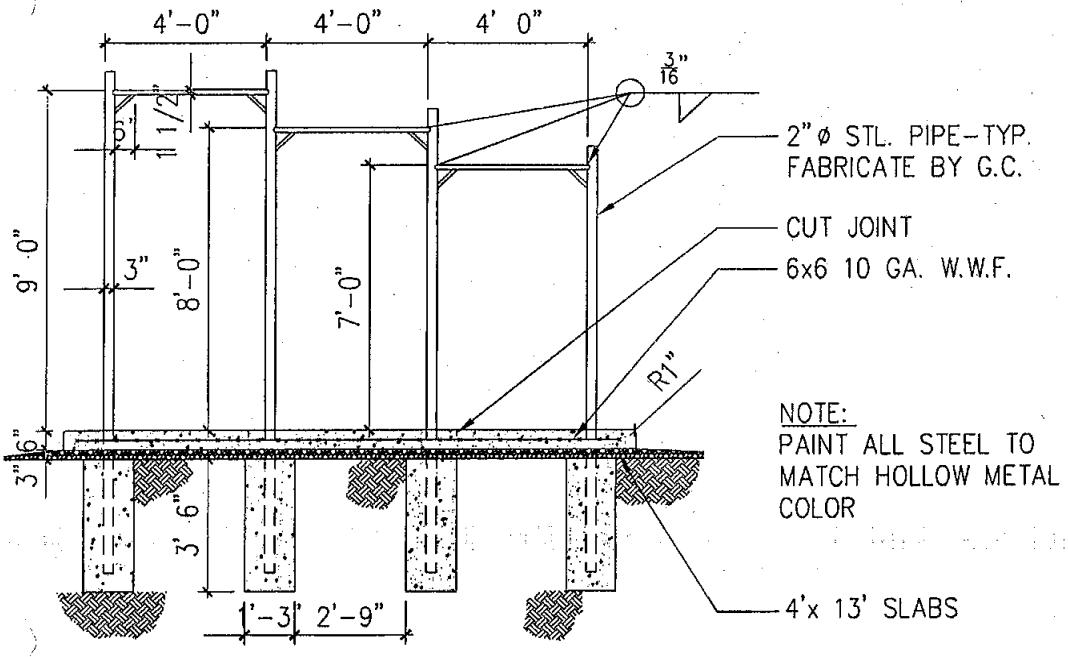

CONSTRUCTION NOTES:

1. COMPACT AGGREGATE BASE COURSE TO 95 % STANDARD
2. PLACE AGGREGATE BASE COURSE TO A DEPTH OF 3"
3. USE 6"x6", 10 GA. WWF IN ALL CONCRETE PADS.
4. CONCRETE SHALL BE 3500 PSI, HAVE A 4" SLUMP USING $\frac{3}{4}$" MINUS AGGREGATE

3 STAGE PULL-UP AREA @ STATION 1

APPENDIX V - PAR COURSE REQUIREMENTS

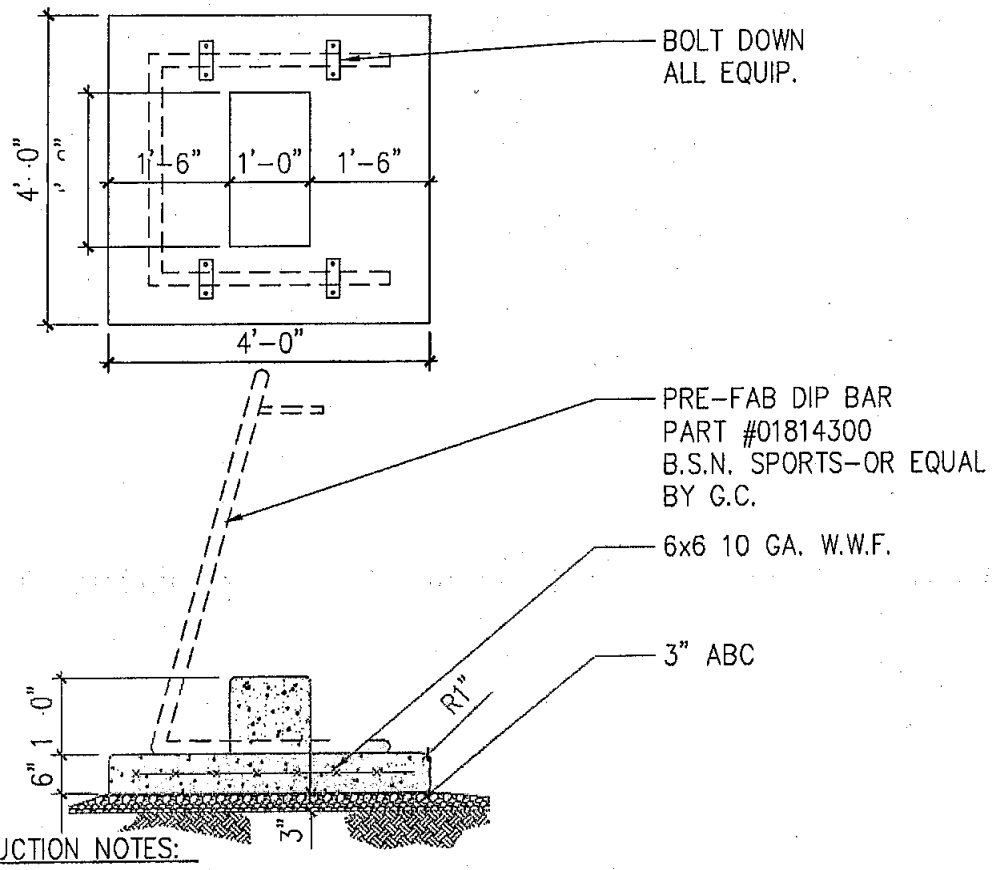

CONSTRUCTION NOTES:

1. COMPACT AGGREGATE BASE COURSE TO 95 % STANDARD
2. PLACE AGGREGATE BASE COURSE TO A DEPTH OF 3"
3. USE 6"x6", 10 GA. WWF IN ALL CONCRETE PADS.
4. CONCRETE SHALL BE 3500 PSI, HAVE A 4" SLUMP USING $\frac{3}{4}$" MINUS AGGREGATE

FEMALE PARALLEL DIPS @ STATION 3

APPENDIX V. – PAR COURSE REQUIREMENTS

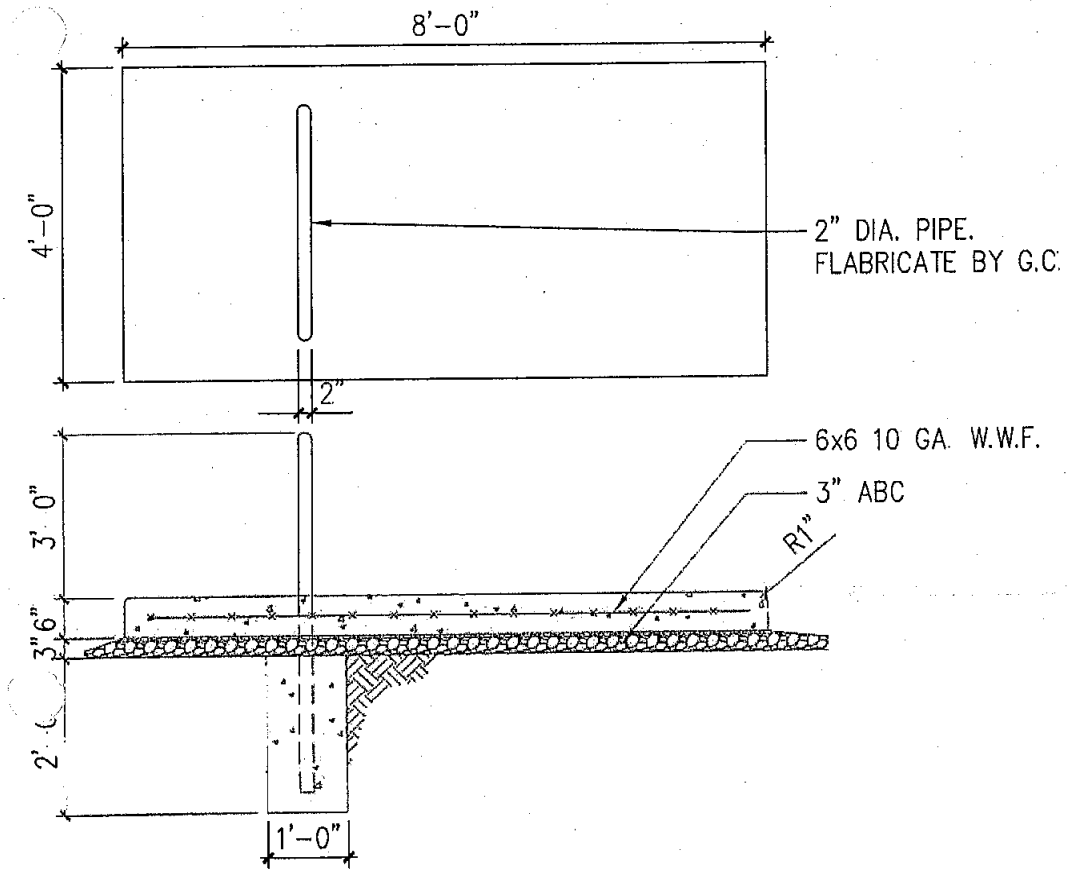

CONSTRUCTION NOTES:

1. COMPACT AGGREGATE BASE COURSE TO 95 % STANDARD
2. PLACE AGGREGATE BASE COURSE TO A DEPTH OF 3"
3. USE 6"x6", 10 GA. WWF IN ALL CONCRETE PADS.
4. CONCRETE SHALL BE 3500 PSI, HAVE A 4" SLUMP USING $\frac{3}{4}$" MINUS AGGREGATE

PULL-UP @ STATION 4

APPENDIX V – PAR COURSE REQUIREMENTS

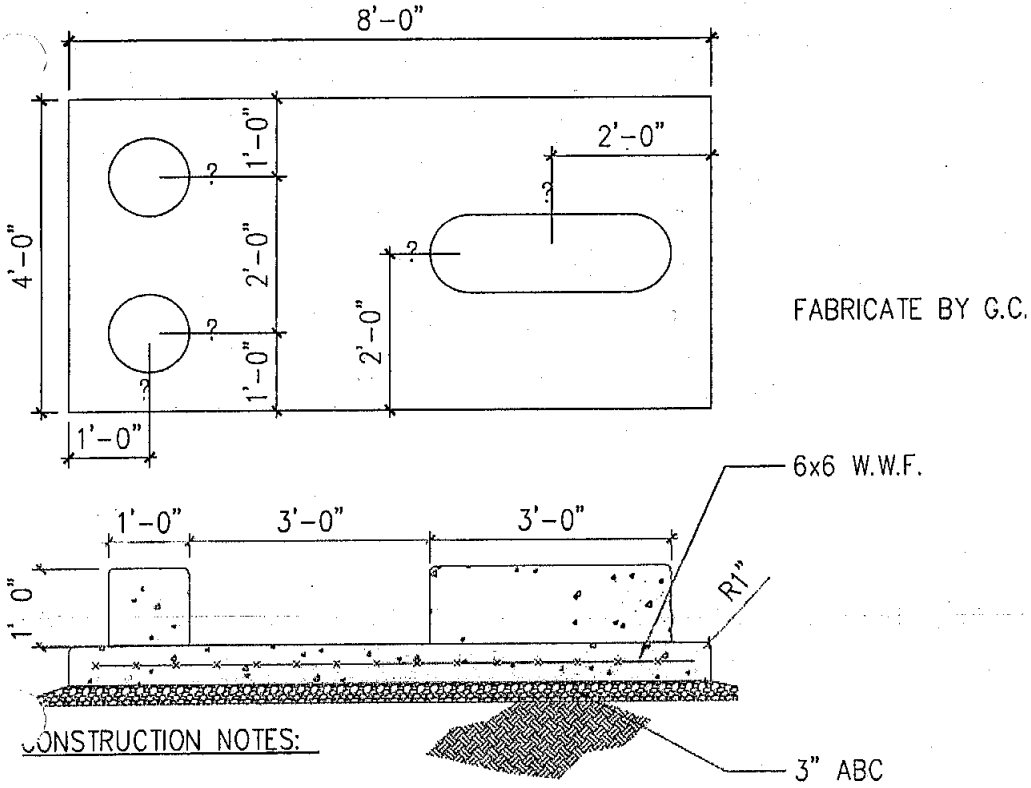

CONSTRUCTION NOTES:

1. COMPACT AGGREGATE BASE COURSE TO 95 % STANDARD
2. PLACE AGGREGATE BASE COURSE TO A DEPTH OF 3"
3. USE 6"x6", 10 GA. WWF IN ALL CONCRETE PADS. CONCRETE SHALL BE 3500 PSI, HAVE A 4"
4. SLUMP USING $\frac{3}{4}$" MINUS AGGREGATE

ELEVATED PUSH UPS @ STATION 5

APPENDIX V PAR COURSE REQUIREMENTS

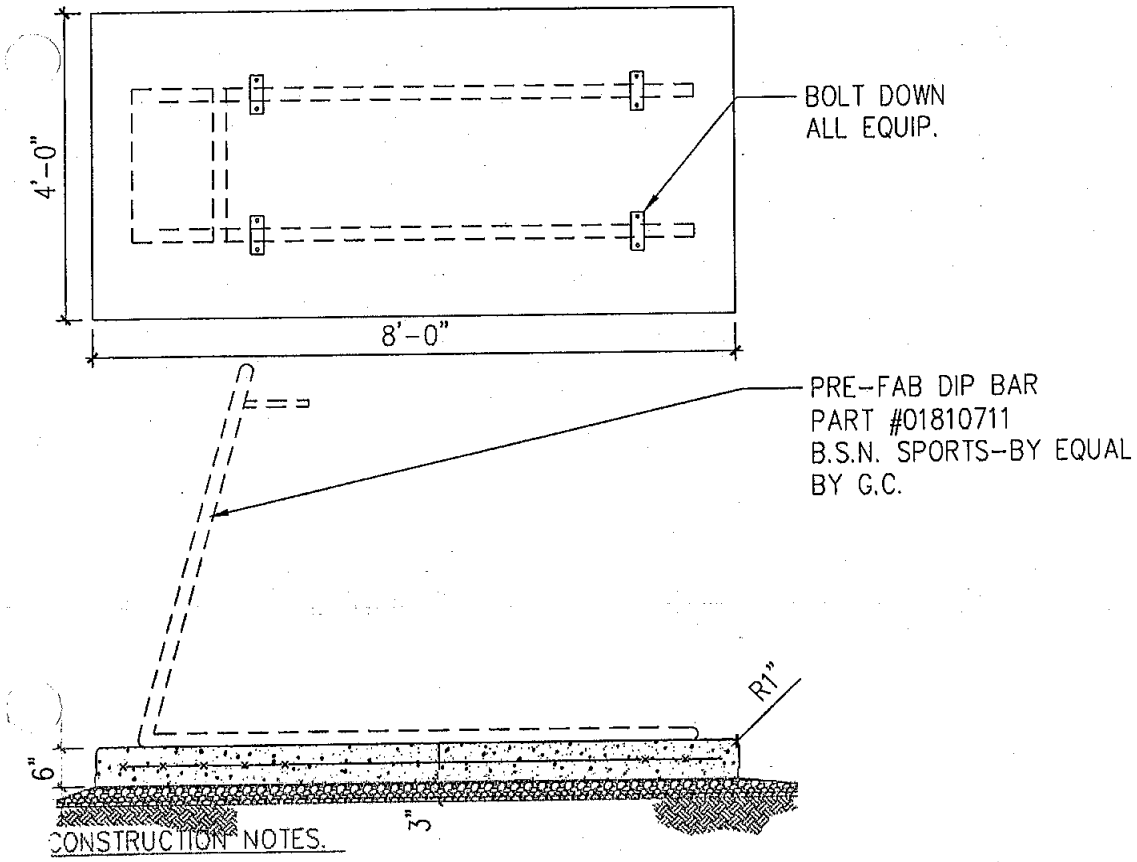

CONSTRUCTION NOTES.

1. COMPACT AGGREGATE BASE COURSE TO 95 % STANDARD
2. PLACE AGGREGATE BASE COURSE TO A DEPTH OF 3"
3. USE 6"x6", 10 GA. WWF IN ALL CONCRETE PADS.
4. CONCRETE SHALL BE 3500 PSI, HAVE A 4" SLUMP USING $\frac{3}{4}$" MINUS AGGREGATE

PARALLEL DIPS @ STATION 6

APPENDIX V – PAR COURSE REQUIREMENTS

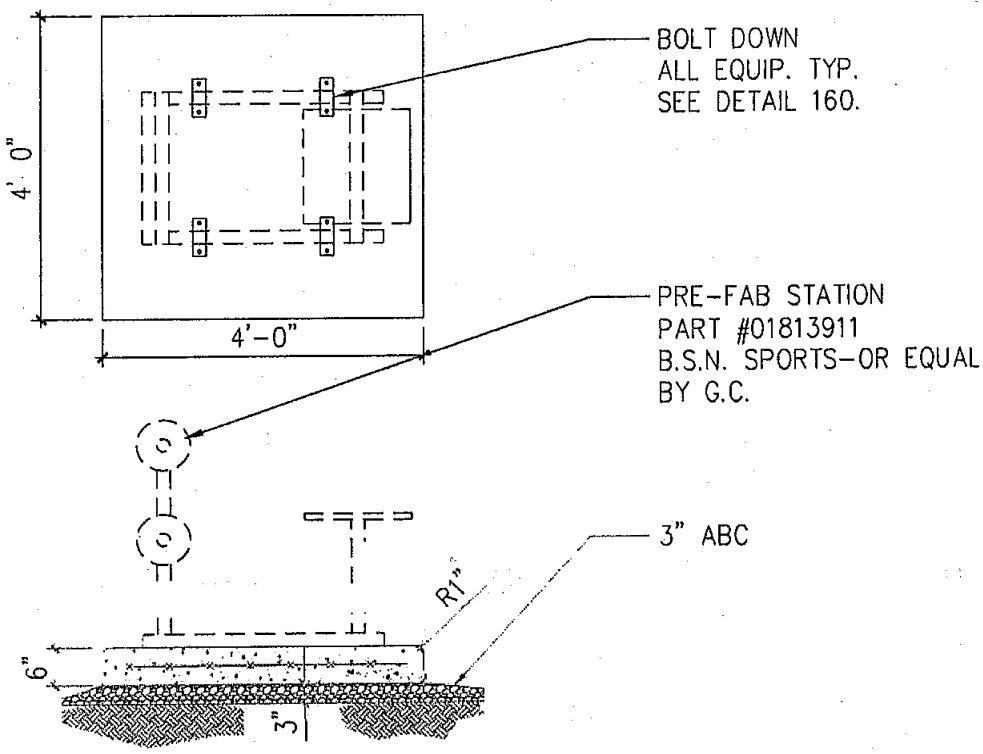

CONSTRUCTION NOTES:

1. COMPACT AGGREGATE BASE COURSE TO 95 % STANDARD
2. PLACE AGGREGATE BASE COURSE TO A DEPTH OF 3"
3. USE 6"x6", 10 GA. WWF IN ALL CONCRETE PADS.
4. CONCRETE SHALL BE 3500 PSI, HAVE A 4" SLUMP USING $\frac{3}{4}$" MINUS AGGREGATE

BACK & ABS STATION @ STATION 7

APPENDIX V – PAR COURSE REQUIREMENTS

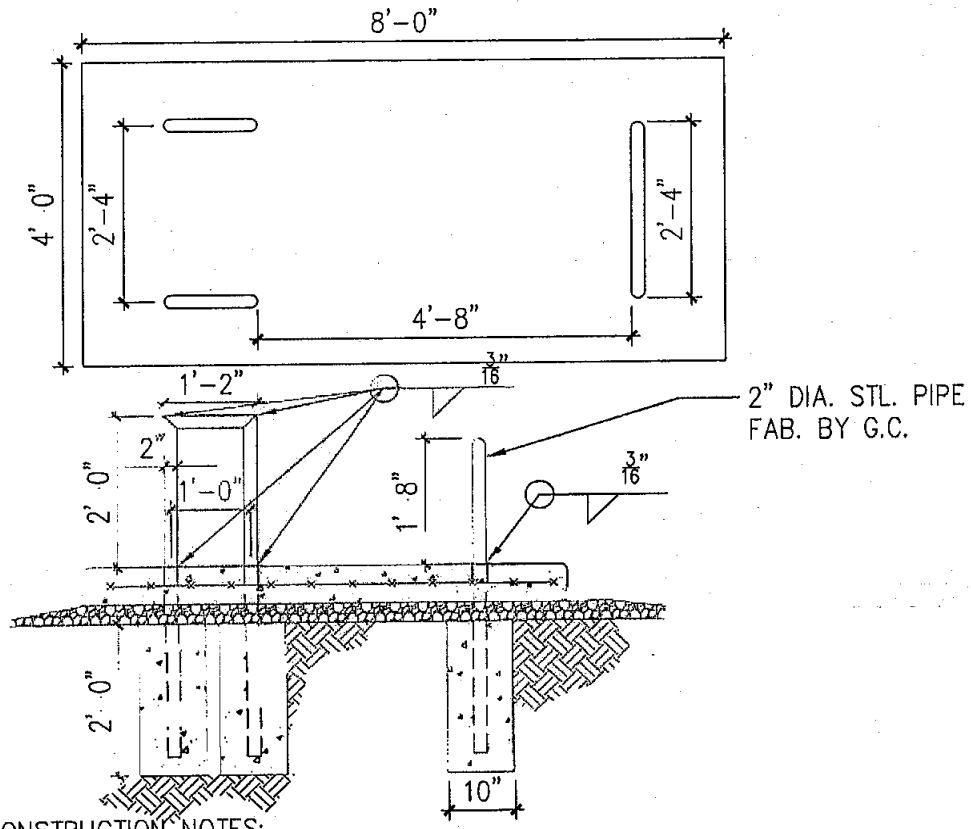

CONSTRUCTION NOTES:

1. COMPACT AGGREGATE BASE COURSE TO 95 % STANDARD
2. PLACE AGGREGATE BASE COURSE TO A DEPTH OF 3"
3. USE 6"x6", 10 GA. WWF IN ALL CONCRETE PADS.
4. CONCRETE SHALL BE 3500 PSI, HAVE A 4" SLUMP USING $\frac{3}{4}$" MINUS AGGREGATE

TRICEP DIP STATION @ STATION 8

APPENDIX V – PAR COURSE REQUIREMENTS

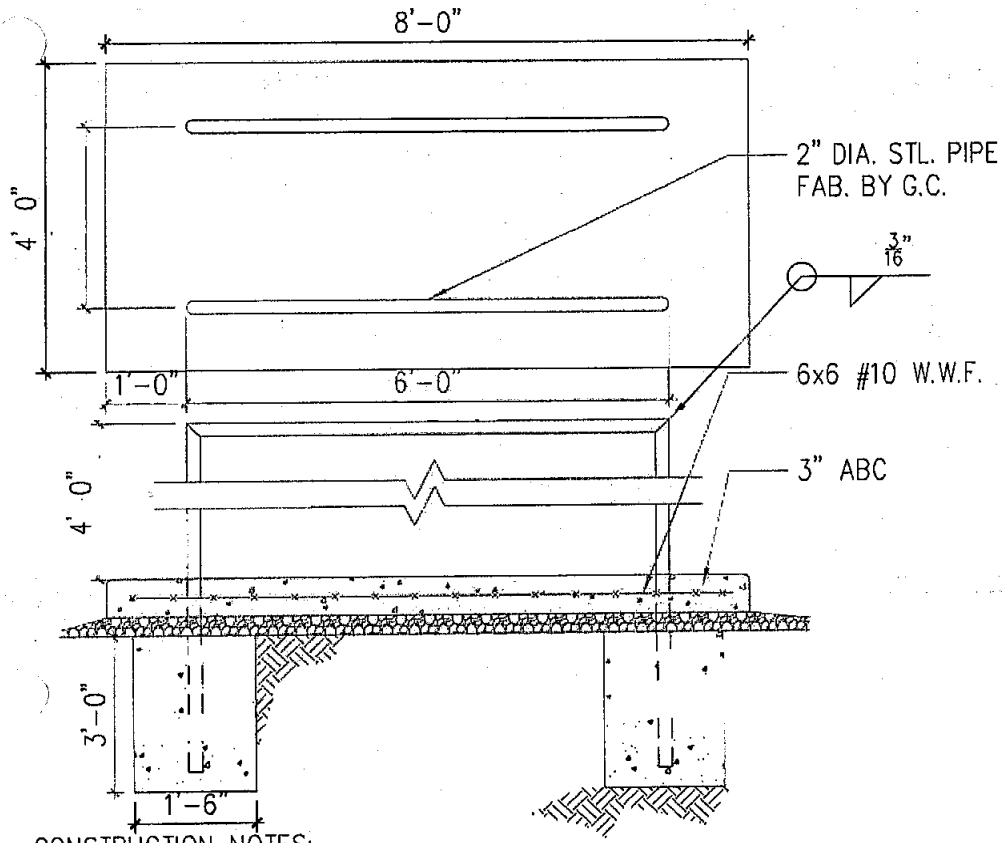

CONSTRUCTION NOTES:

1. COMPACT AGGREGATE BASE COURSE TO 95 % STANDARD
2. PLACE AGGREGATE BASE COURSE TO A DEPTH OF 3"
3. USE 6"x6", 10 GA. WWF IN ALL CONCRETE PADS.
4. CONCRETE SHALL BE 3500 PSI, HAVE A 4" SLUMP USING $\frac{3}{4}$" MINUS AGGREGATE

HANDWALK @ STATION #9

APPENDIX V PAR COURSE REQUIREMENTS

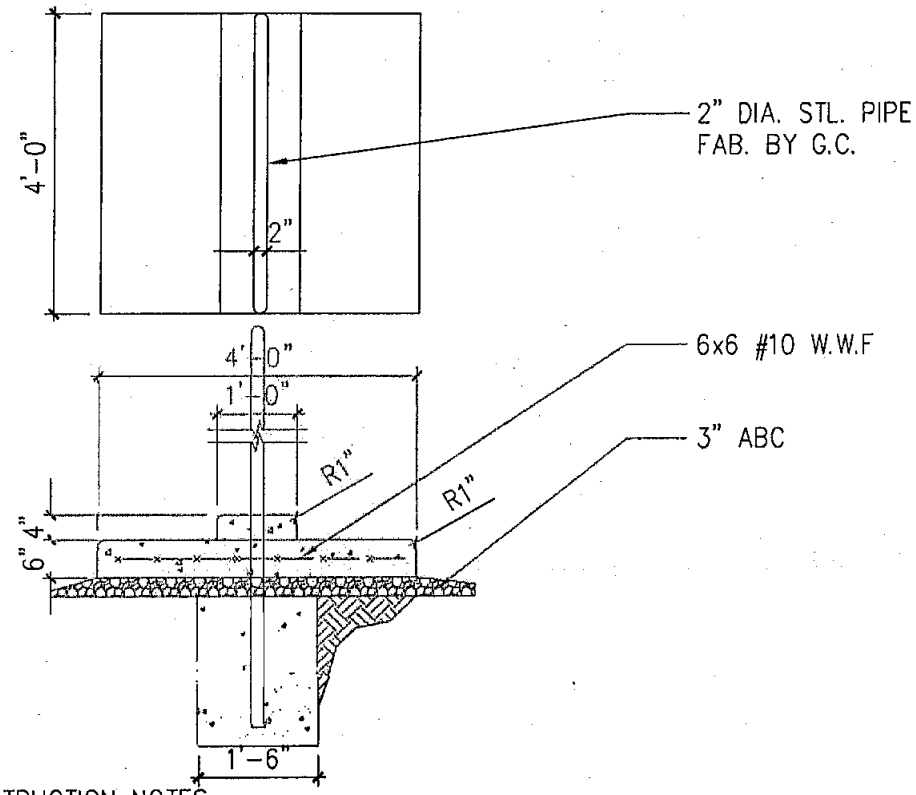

CONSTRUCTION NOTES:

1. COMPACT AGGREGATE BASE COURSE TO 95 % STANDARD
2. PLACE AGGREGATE BASE COURSE TO A DEPTH OF 3"
3. USE 6"x6", 10 GA. WWF IN ALL CONCRETE PADS.
4. CONCRETE SHALL BE 3500 PSI, HAVE A 4" SLUMP USING $\frac{3}{4}$" MINUS AGGREGATE

CALF RAISE @ STATION 10 1/2" = 1'-0"

APPENDIX V – PAR COURSE REQUIREMENTS

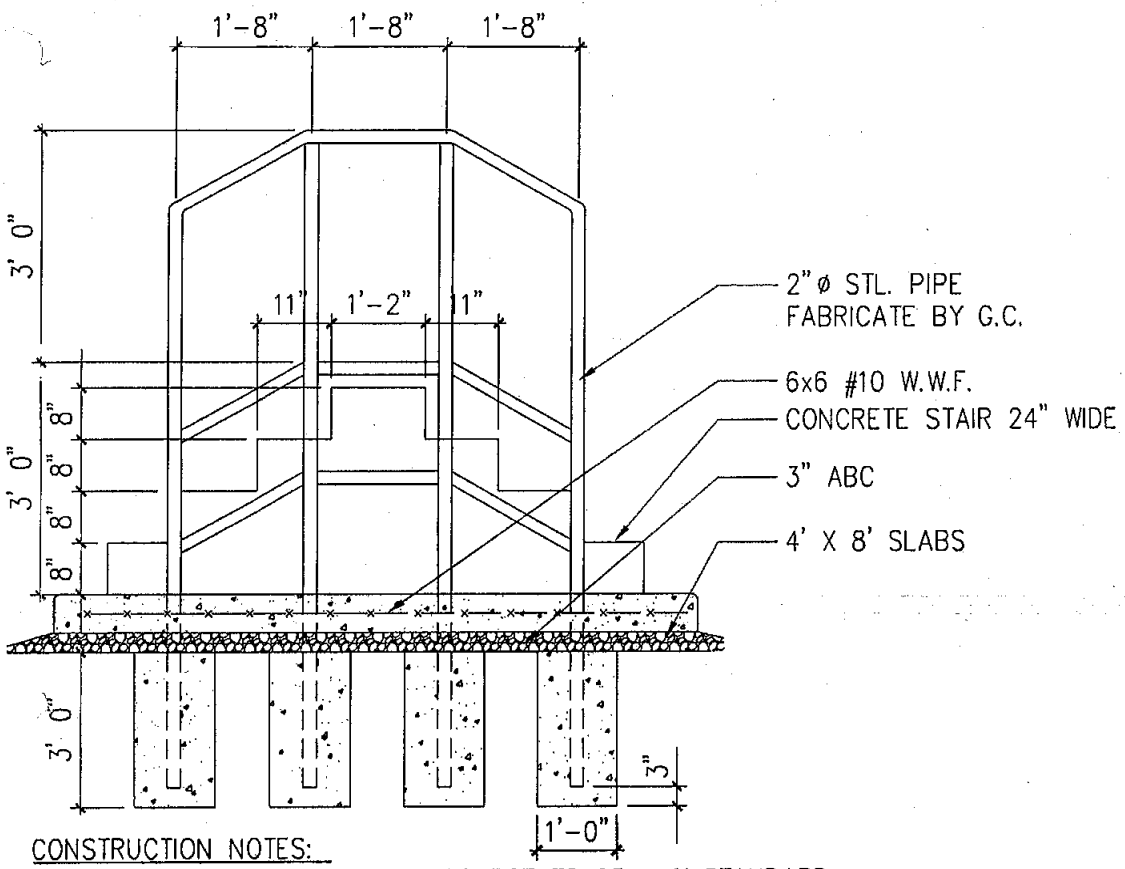

CONSTRUCTION NOTES:

1. COMPACT AGGREGATE BASE COURSE TO 95 % STANDARD
2. PLACE AGGREGATE BASE COURSE TO A DEPTH OF 3"
3. USE 6"x6", 10 GA. WWF IN ALL CONCRETE PADS.
4. CONCRETE SHALL BE 3500 PSI, HAVE A 4" SLUMP USING $\frac{3}{4}$" MINUS AGGREGATE

STAIR CLI'^ @ STATION 11

APPENDIX V – PAR COURSE REQUIREMENT

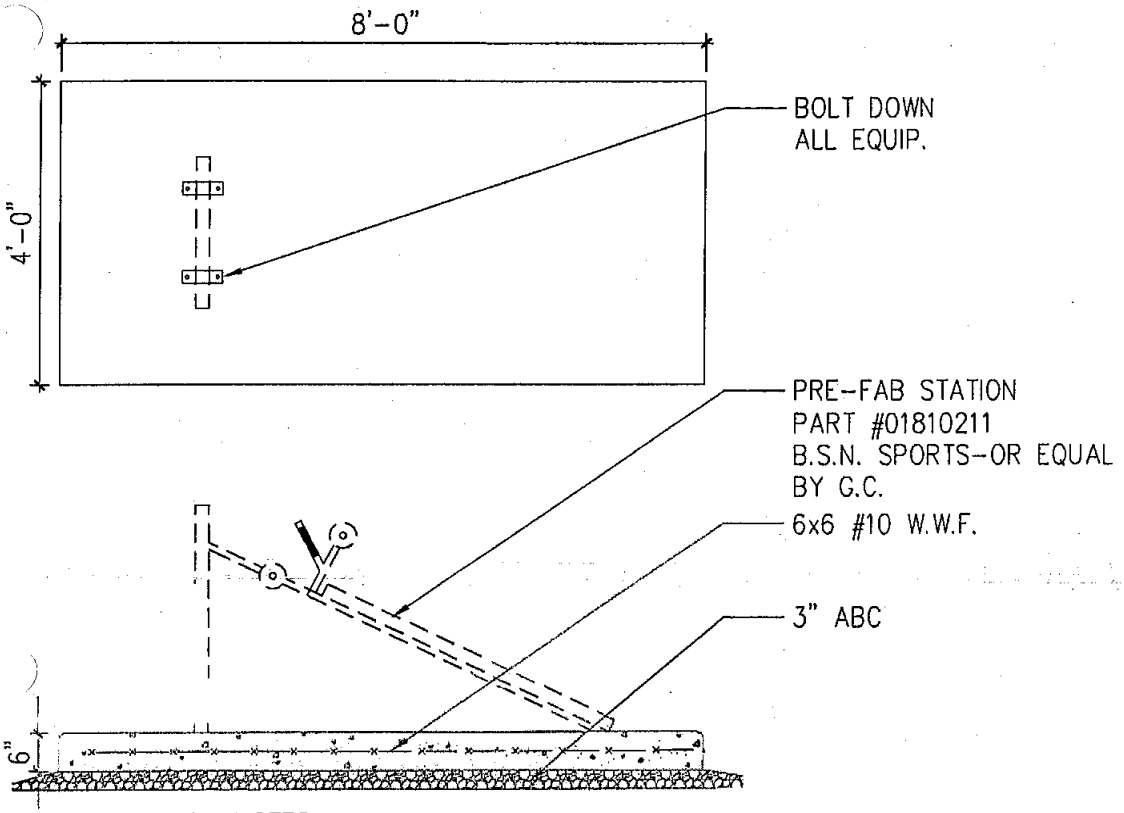

CONSTRUCTION NOTES:

1. COMPACT AGGREGATE BASE COURSE TO 95 % STANDARD
2. PLACE AGGREGATE BASE COURSE TO A DEPTH OF 3"
3. USE 6"x6", 10 GA. WWF IN ALL CONCRETE PADS.
4. CONCRETE SHALL BE 3500 PSI, HAVE A 4" SLUMP USING $\frac{3}{4}$" MINUS AGGREGATE

SIT UPS @ STATION 12

APPENDIX V – PAR COURSE REQUIREMENTS

7.6 APPENDIX VI - FINISH SCHEDULE

Legend: Floors

CAR ..... Carpet
CT..... Ceramic Tile
QT ..... Quarry Tile
SC..... Sealed Concrete
VCT..... Vinyl Composition Tile

Legend: Base

CT..... Ceramic Tile
VIN..... Vinyl Base
SS ..... Stainless Steel

Legend: Walls

CL..... Chain Link Fence
CONC..... Concrete or masonry block
GCMU..... Glazed CMU
GYP..... Gypsum Board
FRP..... Fiberglass Reinforced Panels
PE ..... Paint Enamel

Legend: Ceiling

AP..... Acoustical Panel
EXP ..... Exposed
GYP..... Gypsum Board
SHC..... Shade Cloth
GYP/SM..... Gypsum Board and Security Mesh

AREA	FLOOR	BASE	WALLS	CEILING	HT
Administration					
Office	CAR	VIN	GYP/PE	AP	9'-0"
Open Work Areas	CAR	VIN	GYP/PE	AP	9'-0"
Toilet	CT	CT	CT	AP	9'-0"
Support	CAR or VCT	VIN	GYP/PE	AP	9'-0"
Classrooms					
Classroom/Office	SC	VIN	CONC/PE	GYP	9'-0”
Toilets	CT	CT	CT	GYP	8'-0”
Support	SC	VIN	CONC/PE	AP	9'-0”
Count & Movement					
Office Work Areas	VCT	VIN	GYP/PE	AP	9'-0"
Toilets	CT	CT	CT	GYP	8'-0"
Support	SC	VIN	CONC/PE	AP	9'-0"
Dental					
Office Work Areas	VCT	VIN	GYP/PE	AP	9'-0"
Toilets	CT	CT	CT	GYP	8'-0"
Detention					
Pod/Day Room	SC		CONC/PE	CONC/PE	9'-0"
Control	SC	VIN	GYP/PE	AP	9'-0"
Recreation	CONC		CONC	GRILL	10’-0”
Hair Care					
Work Areas	VCT	VIN	GYP/PE	AP	9'-0"
Hearing					
Offices	VCT	VIN	GYP/PE	AP	9'-0"
Toilets	CT	CT	CT	GYP	8'-0"
Support	VCT	VIN	GYP/PE	AP	9’-0”
Kitchen					
Work Areas	QT	SS	GCMU	AP	9'-0"
Office	QT	QT	GYP/PE	AP	9’-0”
Toilets	CT	CT	CT	GYP	8'-0"
Support	SC		CONC	EXP	
Library					
Library	VCT	VIN	GYP/PE	AP	9'-0"
Toilets	CT	CT	CT	GYP	8'-0"
Support	SC	VIN	CONC/PE	GYP	9’-0”
Maintenance					
Office	SC	VIN	CONC/PE OR GYP/PE	AP	9'-0"

AREA	FLOOR	BASE	WALLS	CEILING	HT
Work Areas	SC	-	CONC or GYP/PE	EXP	
Toilets	CT	CT	CT	AP	9'-0"
Medical					
Office	CAR	VIN	GYP/PE	AP	9'-0"
Work Areas	VCT	VIN	GYP/PE	AP	9'-0"
Toilets	CT	CT	CT	AP	8'-0"
Support	SC		CONC or GYP/PE	EXP	9'-0"
Inmate Holding (Interior)	VCT		CONC or GYP/PE	EXP	
Medication Storage	VCT	VIN	CONC or GYP/PE	GYP/SM	
Inmate Holding (Exterior)	SC		CL	SHC	12'-0"
Nurse Call Area	SC	VIN	GYP/PE	AP	9’0”
Pharmacy					
Office/Work Area	VCT	VIN	GYP/PE	AP	9'-0"
Property/Mail					
Property Storage	SC		CONC	EXP	
Work Areas	SC		CONC	EXP	
Recreation					
Recreation	SC		CONC	EXP	
Toilets	CT	CT	CT	GYP	8'-0"
Support	SC		CONC	EXP	
Vehicle Maintenance					
Office	SC	VIN	CONC/PE or GYP/PE	AP	9'-0"
Work Areas	SC		CONC	EXP	-
Toilets	CT	CT	CT	AP	8'-0"
Support	SC	-	CONC	EXP	-
Visitor Processing					
Office / Control	VCT	VIN	GYP/PE	AP	8'-0"
Public Toilets	CT	CT	CT	AP	8'-0"
Staff Locker rooms	VCT	VIN	GYP/PE	AP	8'-0"
Staff Toilets	CT	CT	CT	AP	8'-0"
Visitation					
Visitation	SC	VIN	CONC/PE	AP	9'-0"
Toilets	CT	CT	CT	GYP	8'-0"
Support	SC	VIN	CONC/PE	GYP	9'-0"
Inmate Processing					
Office	SC	VIN	GYP/PE	AP	8'-0"
Exterior Holding	SC	-	CL	SHC	12'-0"

AREA	FLOOR	BASE	WALLS	CEILING	HT
Interior Holding	SC	-	CONC	CONC	12'-0"
Toilet	CT	CT	CT	AP	8'-0"
Support	SC	-	CONC or GYP/PE	EXP or GYP/PE	8'-0"
Warehouse					
Offices	VCT	VIN	GYP/PE	AP	9'-0"
Work Areas	SC		CONC	EXP	
Toilets	CT	CT	CT	GYP	8'-0"
Support	SC		CONC	EXP	